BALL VALVES AND FITTINGS

dynamic
precise
safe

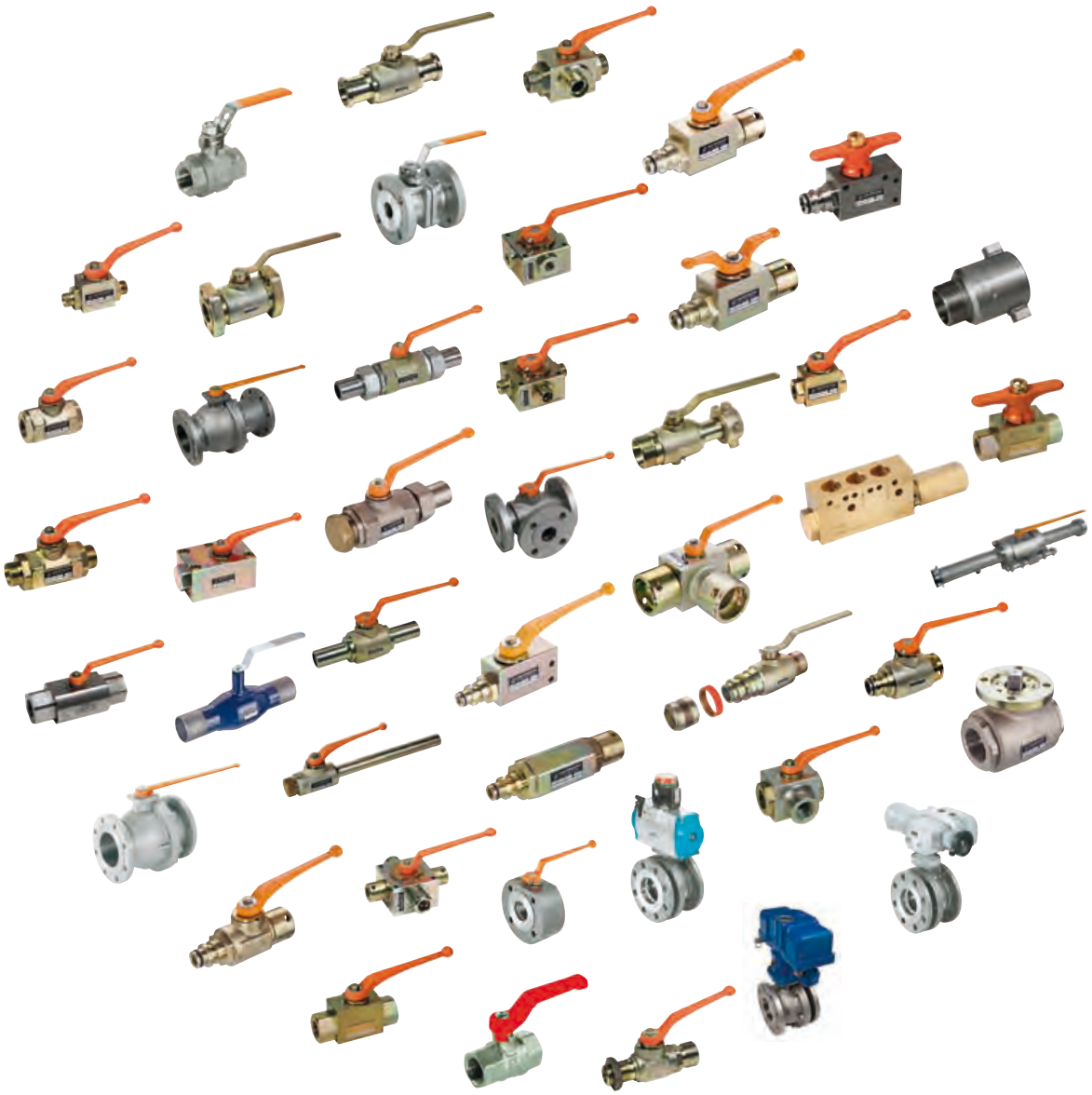

80 Years 1937-2017

vonScheven

H E R A C L I T U S

EVERYTHING FLOWS

The dynamics of fluids has formed an integral part of our business for three generations.
The chemical structures and physical states involved are as varied as our range of ball valves and fittings. These form part of sophisticated plant systems, where they are, so to speak, the ultimate decision-makers. They can open a path or block it – whichever your material flow management system dictates. Just like industrial innovations, the number of new ball valves we develop increases year on year.
We'll be happy to tell you all about them in the latest copy of our PIN product brochure, an application-specific publication produced by our company.

vonScheven

PAGE CONTENTS

10 2-WAY BALL VALVES WITH THREAD CONNECTION

70 2-WAY BALL VALVES WITH FLANGE CONNECTION

126 2-WAY BALL VALVES WITH WELD ENDS

142 BALL VALVES FOR MANIFOLD INSTALLATION

150 MULTIWAY BALL VALVES

178 MINING PORTFOLIO

224 ACTUATION, ACCESSORIES

238 SPECIAL PROGRAMME

242 CERTIFICATES, PT CHART

C O N T E N T S

	Description	Material	Connection	DN mm	PN bar	Type	Page
	2-way ball valves with thread connection						
	Low-pressure block ball valve	Steel	Female thread	04 - 25	max. 100	NBI-C	12
		Stainless steel	Female thread	04 - 25	max. 100	NBI-D	14
	High-pressure block ball valve	Steel	Female thread	04 - 25	max. 500	HBI-C	16
		Stainless steel	Female thread	04 - 25	max. 500	HBI-D	18
	Low-pressure block ball valve	Steel	Male thread	04 - 25	max. 100	NBA-C	20
		Stainless steel	Male thread	04 - 25	max. 100	NBA-D	24
	High-pressure block ball valve	Steel	Male thread	04 - 25	max. 500	HBA-C	28
		Stainless steel	Male thread	04 - 25	max. 500	HBA-D	32
	Low-pressure ball valve	Steel	Female thread	06 - 80	max. 100	NSKI-C	36
		Stainless steel	Female thread	32 - 50	max. 40	NSKI-D	38
	High-pressure ball valve	Steel	Female thread	06 - 80	max. 500	HSKI-C	40
		Stainless steel	Female thread	32 - 50	max. 320	HSKI-D	42
	Low-pressure ball valve	Steel	Male thread	08 - 40	max. 100	NSKA-C	44
		Stainless steel	Male thread	32 - 40	max. 40	NSKA-D	48
	High-pressure ball valve	Steel	Male thread	06 - 40	max. 500	HSKA-C	50
		Stainless steel	Male thread	32 - 40	max. 320	HSKA-D	54
	Maximum-pressure ball valve	Steel	Female thread	06 - 10	max. 800	SHK-C	56
	Maximum-pressure ball valve	Stainless steel	Female thread	08 - 20	to 2500	EHK-D	58
	Block ball valve for high-pressure acetylene TPED	Steel	Female/male thread	06 - 10	25	SBAC-C	60
	Block ball valve for high-pressure acetylene	Steel	Female thread	06 - 10	25	NBAC-C	62
	Brass ball valve	Brass	Female thread	06 - 80	max. 40	MSK	64
	Brass ball valve for gas	Brass	Female thread	10 - 50	max. 05	MSG	66
	Stainless steel ball valve	Stainless steel	Female thread	08 - 100	max. 63	ESK	68

	Description	Material	Connection	DN mm	PN bar	Type	Page
	2-way flange ball valve with DIN flange connection						
	Flange ball valve Short face-to-face length G27 (F4/F5)	Ductile cast iron Steel Stainless steel	DIN flange	32 - 250 10 - 250 10 - 250	max. 16 max. 40 max. 40	KFK-B KFK-C KFK-D	72 76 80
	Stainless steel ball valve Economy series	Stainless steel	DIN flange	15 - 200	max. 40	EFK	84
	Flange ball valve Long face-to-face length G1 (F1)	Ductile cast iron Steel Stainless steel	DIN flange	25 - 200 10 - 250 10 - 50	max. 16 max. 320 max. 320	KFL-B KFL-C KFL-D	86 90 96
	Compact flange ball valve Compact face-to-face length	Steel Stainless steel	DIN flange	10 - 100 10 - 100	max. 40 max. 40	K-KFK-C K-KFK-D	100 104
	Compact ball valve Economy series	Steel Stainless steel	DIN flange	15 - 200 15 - 200	max. 40 max. 40	K-KFK-CE K-KFK-DE	108 110
	Flange ball valve with ceramic lining	Ductile cast iron	DIN flange	50 - 125	max. 16	KFK-BK	112
	2-way ball valves with ANSI flange connection						
	Flange ball valve ANSI face-to-face length	Steel Stainless steel	ANSI flange	15 - 200 15 - 200	max. Class 1500 max. Class 1500	KFB-C KFB-D	114 114
	Flange ball valve Compact face-to-face length	Steel	ANSI flange	10 - 100	max. Class 1500	K-KFB-C	118
	Ball valve	Steel Stainless steel		32 - 250	max. 100	Firesafe	120
	2-way ball valves with SAE flange connection						
	Ball valve for SAE half flanges	Steel	Pipe bundle SAE half flanges	13 - 76	max. 420 (6000 psi)	KSAE-C	122
	Ball valve with SAE flanges	Steel	SAE flange	13 - 76	max. 420 (6000 psi)	KSAE-DR-C	124

C O N T E N T S

	Description	Material	Connection	DN mm	PN bar	Type	Page
	2-way ball valves with weld ends						
	Ball valve	Steel	Detachable weld ends	08 - 50	max. 40	NSK-AL-C	128
	Ball valve as drain valve	Steel	Detachable weld end and closing cap	08 - 50	max. 40	SEL-C	130
	Ball valve	Steel	Fixed weld ends	08 - 50	max. 40	NSK-AF-C	132
					max. 400	HSK-AF-C	132
		Stainless steel		08 - 25	max. 40	NB-AF-D	134
					max. 400	HB-AF-D	134
		Stainless steel		32 - 50	max. 40	NSK-AF-D	134
					max. 400	HSK-AF-D	134
	Ball valve as drain valve	Steel	Fixed weld end and closing cap	08 - 50	max. 40	SEF-C	136
	Ball valve fully welded	Steel	Weld ends	10 - 300	max. 40	VSK-C	138
		Stainless steel		10 - 250	max. 40	VSK-D	140
	Ball valves for manifold installation						
	2/2-way high-pressure block ball valve	Steel	Manifold install.	06 - 25	max. 500	HBP-C	144
		Stainless steel		06 - 25	max. 500	HBP-D	144
	3/2-way high-pressure block ball valve	Steel	Manifold install.	06 - 25	max. 500	HBPD-C	146
		Stainless steel		06 - 25	max. 500	HBPD-D	146
	4/2-way high-pressure block ball valve	Steel	Manifold install.	06 - 25	max. 500	HBVP-C	148
	3-way changeover ball valves						
	Changeover ball valve	Steel	Female thread	04 - 50	max. 500	DBI-C	152
		Stainless steel	Female thread	04 - 50	max. 500	DBI-D	154
	Changeover ball valve	Steel	Male thread	04 - 40	max. 500	DBA-C	156
		Stainless steel	Male thread	04 - 40	max. 500	DBA-D	160

	Description	Material	Connection	DN mm	PN bar	Type	Page
	Changeover ball valve	Steel Stainless steel	Flange Flange	25 - 100 25 - 100	max. 40 max. 40	DBF-C DBF-D	164 164
	Multiway ball valves (positive overlap)						
	3-way low-pressure block ball valve 4-way low-pressure block ball valve	Steel* Steel*	Female thread Female thread	04 - 25 04 - 25	max. 40 max. 40	NBDI-C NBVI-C	166 166
	3-way low-pressure block ball valve 4-way low-pressure block ball valve	Steel* Steel*	Male thread Male thread	04 - 25 04 - 25	max. 40 max. 40	NBDA-C NBVA-C	168 168
	3-way high-pressure block ball valve 4-way high-pressure block ball valve	Steel* Steel*	Female thread Female thread	04 - 25 04 - 25	max. 500 max. 500	HBDI-C HBVI-C	172 172
	3-way high-pressure block ball valve 4-way high-pressure block ball valve	Steel* Steel*	Male thread Male thread	04 - 25 04 - 25	max. 500 max. 500	HBDA-C HBVA-C	174 174
	*Also available in stainless steel (on request).						
	Ball valves with plug-in connectors						
	Overview ball valves with plug-in connectors						180
	High-pressure compact ball valve	Steel Steel	Steck-O Steck-O	10 - 31 10 - 31	max. 500 max. 500	HBSK-C SIBK-C	182 182
	High-pressure compact ball valve	Stainless steel	Steck-O	10 - 25	max. 500	SIBK-D	186
	High-pressure block ball valve	Steel Stainless steel Steel Stainless steel	Steck-O Steck-O Steck-O Steck-O	06 - 31 06 - 31 06 - 31 06 - 31	max. 500 max. 500 max. 500 max. 500	HBS-C HBS-D SIB-C SIB-D	188 188 188 188

C O N T E N T S

	Description	Material	Connection	DN mm	PN bar	Type	Page
	High-pressure ball valve	Steel	Steck-O	10 - 19	max. 500	HKS-C	192
		Steel	Steck-O	10 - 19	max. 500	SI-C	194
		Steel	Steck-O	38 - 80	max. 145	HKS-C	196
		Stainless steel	Steck-O	38 - 80	max. 145	HKS-D	196
	High-pressure ball valve	Steel	Super-Steck-O	12 - 31	max. 500	HBS-C	198
		Stainless steel	Super-Steck-O	12 - 31	max. 500	HBS-D	198
		Steel	Super-Steck-O	12 - 31	max. 500	SIB-C	198
		Stainless steel	Super-Steck-O	12 - 31	max. 500	SIB-D	198
		Steel	Super-Steck-O	38 - 51	max. 420	HKS-C	202
		Stainless steel	Super-Steck-O	38 - 51	max. 420	HKS-D	202
	High-pressure ball valve	Steel	SSKV	10 - 31	max. 455	SIB-C	204
		Stainless steel	SSKV	10 - 31	max. 455	SIB-D	204
		Steel	SSKV	38 - 100	max. 420	HKS-C	204
		Stainless steel	SSKV	38 - 100	max. 420	HKS-D	204
	Changeover ball valve (3-way)	Steel	Steck-O	10 - 31	max. 500	DBS-C	208
		Stainless steel	Steck-O	10 - 31	max. 500	DBS-D	208
	Multiway ball valve (3-way)	Steel	Steck-O	10 - 25	max. 400	HBDS-C	210
		Stainless steel	Steck-O	10 - 25	max. 400	HBDS-D	210
	(4-way)	Steel	Steck-O	10 - 25	max. 400	HBVS-C	210
		Stainless steel	Steck-O	10 - 25	max. 400	HBVS-D	210
	Mining portfolio						
	Low-pressure mining ball valve	Steel	Round thread and male pipe thread	10 - 50	max. 100	MKA-C	212
	High-pressure mining ball valve	Steel	Clamp coupling	50 - 100	max. 320	HKA-C	214
	High-pressure - mining ball valve	Steel	Screw coupling	25 - 80	max. 500	HKA-C	214
	Pre-stressed non-return valve	Steel	Steck-O	10 - 51	max. 500	VRSV-C	216
		Stainless steel	Steck-O	10 - 51	max. 500	VRSV-D	216

	Description	Material	Connection	DN mm	PN bar	Type	Page
	Hose breakage safety valve	Steel	Various	25 - 80	max. 16	V-SB	218
	Water spray valve	Brass	Steck-O	10	max. 500	V-KV	220
	Compressed air lubricator	Steel	Female thread	10 - 50	max. 10		222
	Actuation						
	Manual actuation (hand levers, handles, hand wheels etc.)						226
	Pneumatic actuator					SP/SPF	228
	Electric actuator						230
	Hydraulic actuator						230
	Electro-hydraulic actuator						231
	Actuator mountings						232
	Accessories						
	Overview of accessories (solenoid valves, position monitors)						236
	Special programme						
	Overview special programme						238
	Certificates, PT Chart						
	Certificates						242
	PT chart						244

For example:

Dockyards

When it comes to logistics, more than 95 % of the world's intercontinental trade is handled by ships. Depending on the geographic region, inland waterway vessels account for up to 60 % of goods transportation. In order to reduce general cargo costs and remain competitive, shipping companies require ever larger and faster ships – particularly for the transport of containers. This represents a sizeable challenge for dockyards and engineers as well as the equipment deployed in this field. Our ball valves are equal to this challenge, reliably managing the flow of various welding and cutting gases.

Low-pressure block ball valve NBI-C, steel

With female thread

DN 4 - 25 PN max. 100

Series 06 – female thread on both sides DIN EN ISO 228-1
42 – NPT female thread ANSI/ASME B1.20.1

Face-to-face lengths DIN 3202 – 4 series M3

Temperature range Standard: -10°C to +150°C; DVGW -20°C to +60°C
On request: -50°C to +250°C

Range of use Liquids: Liquids group 1 and 2 according to PED 2014/68/EU Article 13
Gases: Liquids group 1 and 2 according to PED 2014/68/EU Article 13
As a matter of principle, the resistance to the flow medium must be ensured.

Approvals Series 06: DVGW for gas PN 16

Technical specification The NBI-C type ball valve consists of a block body with connector screwed in on both sides. The stem is fitted blowout-proof from the outside. Simple replacement of the stem seal is ensured by the fitting used. Actuators can be attached by means of an extension kit. This retrofit requirement must be specified when placing the order (additional charge).

Please ask separately for requirements that exceed the standard conditions of use listed in this data sheet.
As a matter of principle, the safety information provided in the operating and servicing manual must be observed!
The operating and servicing manuals as well as the approval certificates can be downloaded at www.von-scheven.de.

We reserve the right to carry out technical modifications.

1.010 EN 08/17

Technical data NBI-C

Series 06

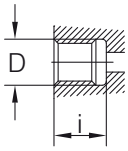

Series 42

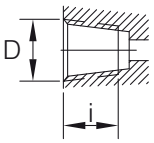

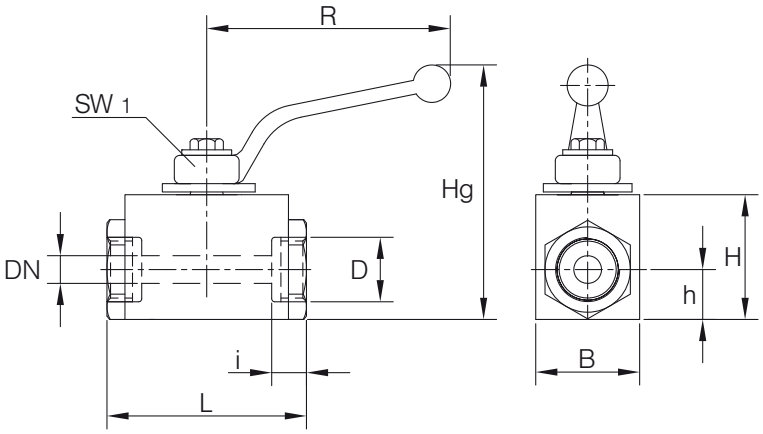

Series 06 (female thread on both sides DIN EN ISO 228 - 1)

DN mm	PN bar	D	i mm	L mm	B mm	H mm	h mm	Hg mm	R mm	SW1 mm	Weight kg
4	100	G1/8"*	11.0	50	25	30	12.5	61	76	7	0.3
6	100	G1/4"*	12.5	50	25	30	12.5	61	76	7	0.3
10	100	G3/8"*	12.5	60	30	40	15.0	92	112	10	0.5
15	100	G1/2"*	16.0	75	35	45	18.0	85	130	10	1.0
20	63	G3/4"*	18.0	80	45	55	25.0	95	130	10	1.2
25	63	G1"*	20.0	90	55	65	30.0	111	160	10	2.1

*DVGW: G+Rp

Series 42 (NPT female thread ANSI/ASME B1.20.1)

DN mm	PN bar	D	i mm	L mm	B mm	H mm	h mm	Hg mm	R mm	SW1 mm	Weight kg
4	100	NPT 1/8"	11.0	50	25	30	12.5	61	76	7	0.3
6	100	NPT 1/4"	12.5	50	25	30	12.5	61	76	7	0.3
10	100	NPT 3/8"	12.5	60	30	40	15.0	92	112	10	0.5
15	100	NPT 1/2"	15.0	75	35	45	18.0	85	130	10	1.0
20	63	NPT 3/4"	18.0	80	45	55	25.0	95	130	10	1.2
25	63	NPT 1"	20.0	90	55	65	30.0	111	160	10	2.1

Example of order: Ball valve type NBI-C DN 15 made of steel with female thread DIN EN ISO 228 – 1 (Series 06)
NBI-C 15 06

Parts list NBI-C

Pos.	Designation	Material*
10	Body	Steel
20	Fitting	Steel
30	Ball	Brass
40	Seal	PTFE
50	Stop washer	Steel
60	Stem	Brass
70	Fitting	Brass
80	O-ring	NBR, FPM
90	Hand lever	Zinc die-casting
100	O-ring	NBR, FPM
110	Bolt	
120	Washer	
130	O-ring	NBR, FPM
140	Stop pin	

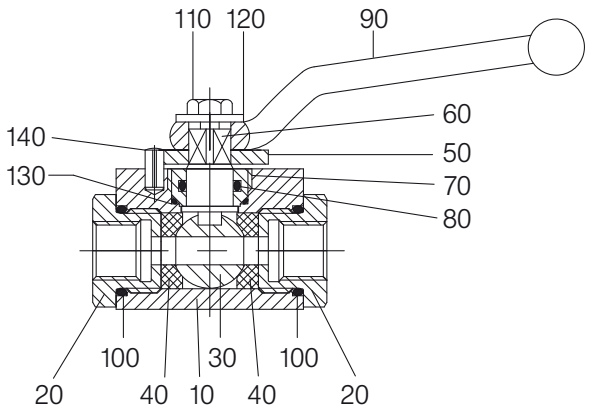

*Standard (can vary according to nominal width), other materials on request.
Due to the design, not all items are used for all nominal widths.

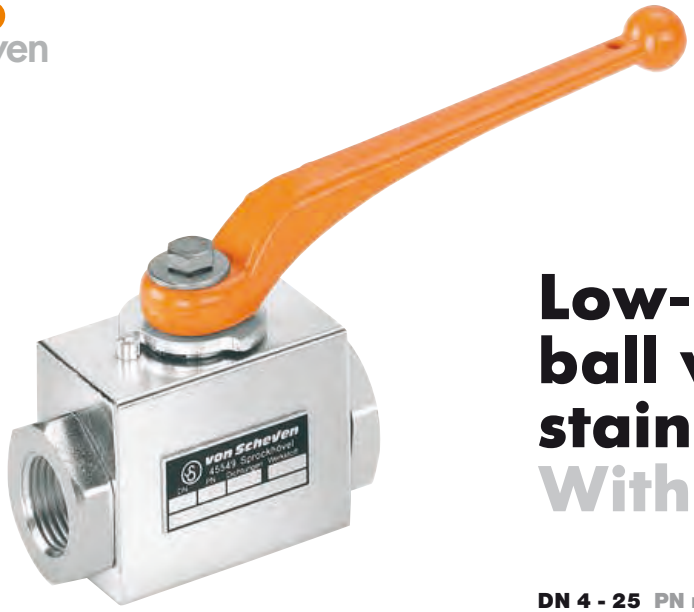

Low-pressure block ball valve NBI-D, stainless steel

With female thread

DN 4 - 25 **PN max. 100**

Series 06 – female thread on both sides DIN EN ISO 228-1
42 – NPT female thread ANSI/ASME B1.20.1

Face-to-face lengths DIN 3202 – 4 series M3

Temperature range Standard: -10°C to +150°C; DVGW -20°C to +60°C
On request: -50°C to +250°C

Range of use Liquids: Liquids group 1 and 2 according to PED 2014/68/EU Article 13
Gases: Liquids group 1 and 2 according to PED 2014/68/EU Article 13
As a matter of principle, the resistance to the flow medium must be ensured.

Approvals Series 06: DVGW for gas PN

Technical specification The NBI-D type ball valve consists of a block body with connector screwed in on both sides. The stem is fitted blowout-proof. Actuators can be attached by means of an extension kit. This retrofit requirement must be specified when placing the order (additional charge).

Please ask separately for requirements that exceed the standard conditions of use listed in this data sheet.
As a matter of principle, the safety information provided in the operating and servicing manual must be observed!
The operating and servicing manuals as well as the approval certificates can be downloaded at www.von-scheven.de.

We reserve the right to carry out technical modifications.

1.020 EN 08/17

Technical data NBI-D

Series 06

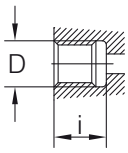

Series 42

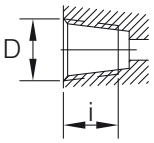

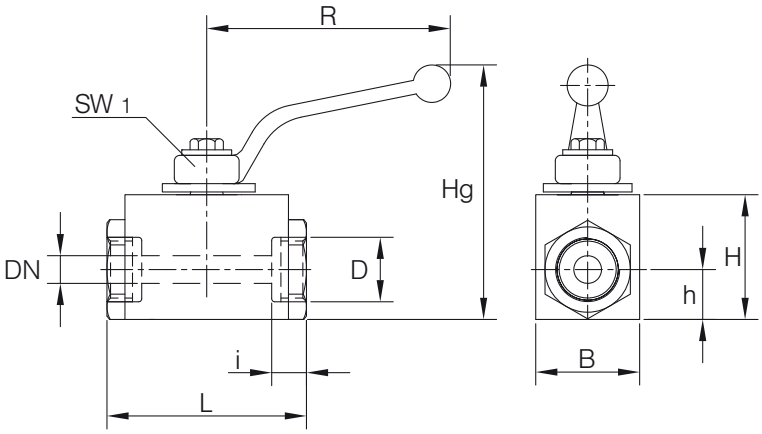

Series 06 (female thread on both sides DIN EN ISO 228 - 1)

DN mm	PN bar	D	i mm	L mm	B mm	H mm	h mm	Hg mm	R mm	SW1 mm	Weight kg
4	100	G1/8"**	11.0	60*	40	40	16	92	112	10	0.6
6	100	G1/4"**	12.5	60*	40	40	16	92	112	10	0.6
10	100	G3/8"**	12.5	60	40	40	16	92	112	10	0.6
15	100	G1/2"**	16.0	75	45	45	19	85	130	10	1.1
20	63	G3/4"**	18.0	80	55	55	25	95	130	10	1.3
25	63	G1"**	20.0	90	65	65	30	111	160	10	2.2

*Deviating from face-to-face length M3; where necessary request face-to-face lengths in special version.
** DVGW: G + Rp

Series 42 (NPT female thread ANSI/ASME B1.20.1)

DN mm	PN bar	D	i mm	L mm	B mm	H mm	h mm	Hg mm	R mm	SW1 mm	Weight kg
4	100	NPT 1/8"	11.0	60*	40	40	16	92	112	10	0.6
6	100	NPT 1/4"	12.5	60*	40	40	16	92	112	10	0.6
10	100	NPT 3/8"	12.5	60	40	40	16	92	112	10	0.6
15	100	NPT 1/2"	15.0	75	45	45	19	85	130	10	1.1
20	63	NPT 3/4"	18.0	80	55	55	25	95	130	10	1.3
25	63	NPT 1"	20.0	90	65	65	30	111	160	10	2.2

*Deviating from face-to-face length M3; where necessary request face-to-face lengths in special version.

Example of order: Ball valve type NBI-D DN 15 made of stainless steel with female thread DIN EN ISO 228 – 1 (Series 06) **NBI-D 15 06**

Parts list NBI-D

Pos.	Designation	Material*
10	Body	Stainless steel
20	Fitting	Stainless steel
30	Ball	Stainless steel
40	Seal	PTFE
50	Stop washer	Stainless steel
60	Stem	Stainless steel
80	O-ring	NBR, FPM
90	Hand lever	Zinc die-casting
100	O-ring	NBR, FPM
110	Bolt	
120	Washer	
130	Sliding ring	PTFE
140	Stop pin	

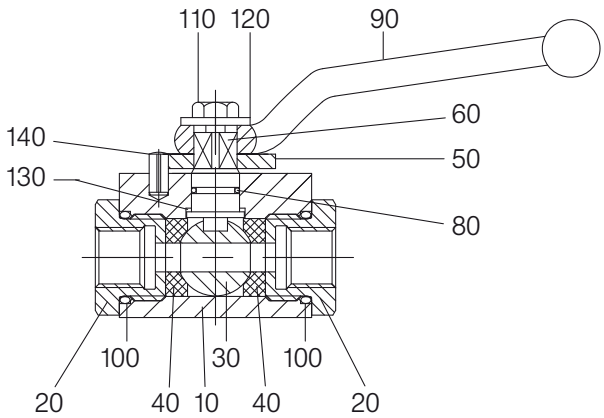

*Standard (can vary according to nominal width), other materials on request.
Due to the design, not all items are used for all nominal widths.

High-pressure block ball valve HBI-C, steel

With female thread

DN 4 – 25 PN max. 500

Series 06 – female thread on both sides DIN EN ISO 228-1
42 – NPT female thread ANSI /ASME B1.20.1

Face-to-face lengths DIN 3202 – 4 series M3

Temperature range Standard: -10°C to +90°C
On request: -50°C to +250°C

Range of use Liquids: Liquids group 1 and 2 according to PED 2014/68/EU Article 13
Gases: Liquids group 1 and 2 according to PED 2014/68/EU Article 13
As a matter of principle, the resistance to the flow medium must be ensured.

Technical specification The HBI-C type ball valve consists of a block body with connectors screwed in on both sides. The stem is fitted blowout-proof from the outside. Simple replacement of the stem seal is ensured by the fitting used. Actuators can be attached by means of an extension kit. This retrofit requirement must be specified when placing the order (additional charge).

Please ask separately for requirements that exceed the standard conditions of use listed in this data sheet.
As a matter of principle, the safety information provided in the operating and servicing manual must be observed!
The operating and servicing manuals as well as the approval certificates can be downloaded at www.von-scheven.de.

We reserve the right to carry out technical modifications.

1.030 EN 08/17

Technical data HBI-C

Series 06

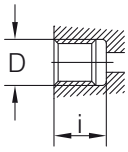

Series 42

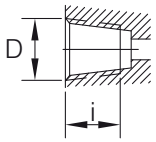

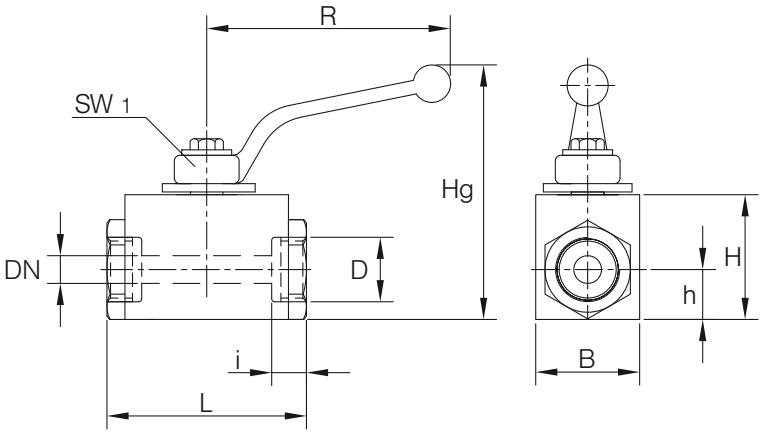

Series 06 (female thread on both sides DIN EN ISO 228 - 1)

DN mm	PN bar	D	i mm	L mm	B mm	H mm	h mm	Hg mm	R mm	SW1 mm	Weight kg
4	500	G 1/8"	11.0	50	25	30	12.5	61	76	7	0.3
6	500	G 1/4"	12.5	50	25	30	12.5	61	76	7	0.3
10	500	G 3/8"	12.5	60	30	40	15.0	92	112	10	0.5
15	500	G 1/2"	16.0	75	35	45	18.0	85	130	10	1.0
20	400	G 3/4"	18.0	80	45	55	25.0	95	130	10	1.2
25	400	G 1"	20.0	90	55	65	30.0	111	160	10	2.1

Series 42 (NPT female thread ANSI/ASME B1.20.1)

DN mm	PN bar	D	i mm	L mm	B mm	H mm	h mm	Hg mm	R mm	SW1 mm	Weight kg
4	500	NPT 1/8"	11.0	50	25	30	12.5	61	76	7	0.3
6	500	NPT 1/4"	12.5	50	25	30	12.5	61	76	7	0.3
10	500	NPT 3/8"	12.5	60	30	40	15.0	92	112	10	0.5
15	500	NPT 1/2"	15.0	75	35	45	18.0	85	130	10	1.0
20	400	NPT 3/4"	18.0	80	45	55	25.0	95	130	10	1.2
25	400	NPT 1"	20.0	90	55	65	30.0	111	160	10	2.1

Example of order: Ball valve type HBI-C DN 15 made of steel with female thread DIN EN ISO 228 – 1 (Series 06)
HBI-C 15 06

Parts list HBI-C

Pos.	Designation	Material*
10	Body	Steel
20	Fitting	Steel
30	Ball	Steel
40	Seal	POM
50	Stop washer	Steel
60	Stem	Steel
70	Fitting	Brass
80	O-ring	NBR
90	Hand lever	Zinc die-casting
100	O-ring	NBR
110	Bolt	
120	Washer	
130	O-ring	NBR
140	Stop pin	

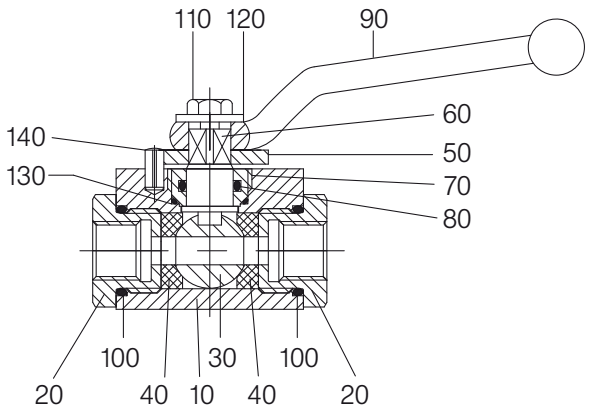

*Standard (can vary according to nominal width), other materials on request.
Due to the design, not all items are used for all nominal widths.

High-pressure block ball valve HBI-D, stainless steel

With female thread

DN 4 - 25 **PN max. 500**

Series 06 – female thread on both sides DIN EN ISO 228-1
42 – NPT female thread ANSI/ASME B1.20.1

Face-to-face lengths DIN 3202 – 4 series M3

Temperature range Standard: -10°C to +90°C
On request: -50°C to +250°C

Range of use Liquids: Liquids group 1 and 2 according to PED 2014/68/EU Article 13
Gases: Liquids group 1 and 2 according to PED 2014/68/EU Article 13
As a matter of principle, the resistance to the flow medium must be ensured.

Technical specification The HBI-D type ball valve consists of a block body with connector screwed in on both sides. The stem is fitted blowout-proof. Actuators can be attached by means of an extension kit. This retrofit requirement must be specified when placing the order (additional charge).

Please ask separately for requirements that exceed the standard conditions of use listed in this data sheet.
As a matter of principle, the safety information provided in the operating and servicing manual must be observed!
The operating and servicing manuals as well as the approval certificates can be downloaded at www.von-scheven.de.

We reserve the right to carry out technical modifications.

1.040 EN 08/17

Technical data HBI-D

Series 06

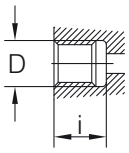

Series 42

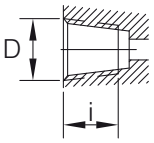

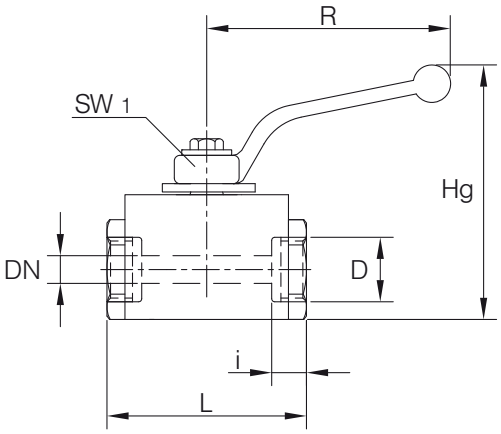

Series 06 (female thread on both sides DIN EN ISO 228 - 1)

DN mm	PN bar	D	i mm	L mm	B mm	H mm	h mm	Hg mm	R mm	SW1 mm	Weight kg
4	500	G 1/8"	11.0	60*	40	40	16	92	112	10	0.6
6	500	G 1/4"	12.5	60*	40	40	16	92	112	10	0.6
10	500	G 3/8"	12.5	60*	40	40	16	92	112	10	0.6
15	500	G 1/2"	16.0	75	45	45	19	85	130	10	1.1
20	400	G 3/4"	18.0	80	55	55	25	95	130	10	1.3
25	400	G 1"	20.0	90	65	65	30	111	160	10	2.2

*Deviating from face-to-face length M3; where necessary request face-to-face lengths in special version.

Series 42 (NPT female thread ANSI/ASME B1.20.1)

DN mm	PN bar	D	i mm	L mm	B mm	H mm	h mm	Hg mm	R mm	SW1 mm	Weight kg
4	500	NPT 1/8"	11.0	60*	40	40	16	92	112	7	0.60
6	500	NPT 1/4"	12.5	60*	40	40	16	92	112	7	0.60
10	500	NPT 3/8"	12.5	60*	40	40	16	92	112	10	0.60
15	500	NPT 1/2"	15.0	75	45	45	19	85	130	10	1.10
20	400	NPT 3/4"	18.0	80	55	55	25	95	130	10	1.30
25	400	NPT 1"	20.0	90	65	65	30	111	160	10	2.21

*Deviating from face-to-face length M3; where necessary request face-to-face lengths in special version.

Example of order: Ball valve type HBI-D DN 15 made of stainless steel with female thread DIN EN ISO 228 -1 (Series 06) **HBI-D 15 06**

Parts list HBI-D

Pos.	Designation	Material*
10	Body	Stainless steel
20	Fitting	Stainless steel
30	Ball	Stainless steel
40	Seal	POM
50	Stop washer	Stainless steel
60	Stem	Stainless steel
80	O-ring	NBR
90	Hand lever	Zinc die-casting
100	O-ring	NBR
110	Bolt	
120	Washer	
130	Sliding ring	PTFE
140	Stop pin	

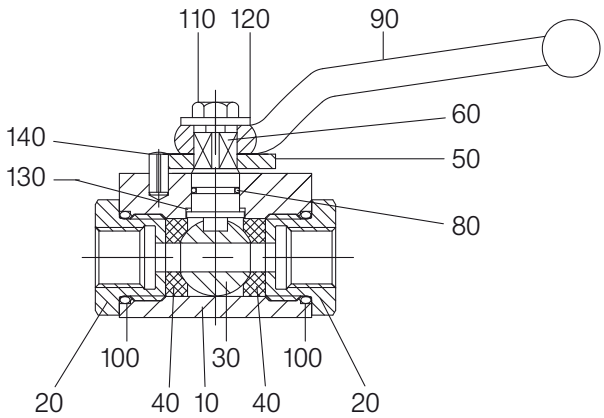

*Standard (can vary according to nominal width), other materials on request.
Due to the design, not all items are used for all nominal widths.

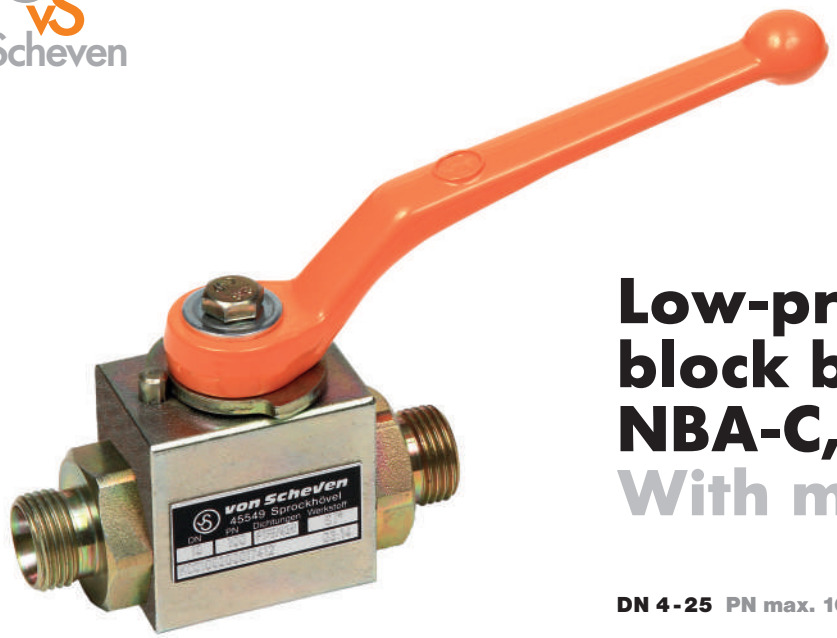

Low-pressure block ball valve NBA-C, steel

With male thread

DN 4 - 25 **PN max. 100**

Series 02 – male thread on both sides for non-soldering compression fittings with cutting ring DIN 2353 – light-duty series
03 – male thread on both sides for non-soldering compression fittings with cutting ring DIN 2353 – heavy-duty series
05 – male thread on both sides; flat sealing pipe thread DIN EN ISO 228-1
44 – male thread on both sides; flat sealing NPT ANSI/ASME B 1.20.1

Face-to-face lengths DIN 3202 – 5 series V 1

Temperature range Standard: -10°C to +150°C; DVGW -20°C to +60°C
On request: -50°C to +250°C

Range of use Liquids: Liquids group 1 and 2 according to PED 2014/68/EU Article 13
Gases: Liquids group 1 and 2 according to PED 2014/68/EU Article 13
As a matter of principle, the resistance to the flow medium must be ensured.

Approvals Series 02 and 03: DVGW for gas
PN 40 (PTFE), PN 63-100 (PTFE+GF)
TÜV-Component mark

Technical specification The NBA-C type ball valve consists of a block body with connector screwed in on both sides. The stem is fitted blowout-proof from the outside. Simple replacement of the stem seal is ensured by the fitting used. Actuators can be attached by means of an extension kit. This retrofit requirement must be specified when placing the order (additional charge).

1.050 EN 08/17

Technical data NBA-C

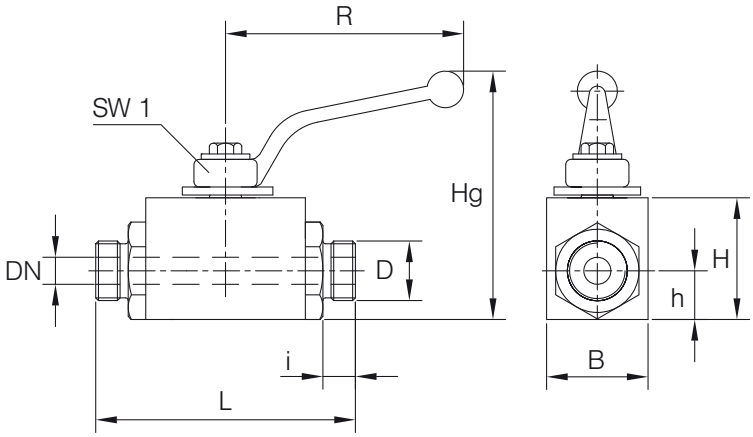

Series 02

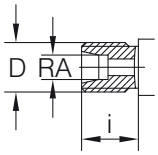

Series 03

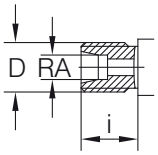

Series 05

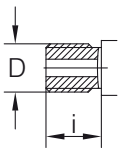

Series 44

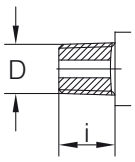

Series 02 (non-soldering compression fittings with cutting ring DIN 2353, light-duty series)

DN mm	RA mm	PN bar	D	i mm	L mm	B mm	H mm	h mm	Hg mm	R mm	SW1 mm	Weight kg
4	6	100	M 12x1.5	10	76	25	30	12.5	61	76	7	0.3
6	8	100	M 14x1.5	10	76	25	30	12.5	61	76	7	0.3
8	10	100	M 16x1.5	11	76	30	40	15.0	92	112	10	0.5
10	12	100	M 18x1.5	11	80	30	40	15.0	92	112	10	0.5
12	15	100	M 22x1.5	12	96	35	45	18.0	85	130	10	0.8
16	18	100	M 26x1.5	12	105	40	50	21.0	90	130	10	1.0
20	22	63	M 30x2.0	14	110	45	55	25.0	95	130	10	1.3
25	28	63	M 36x2.0	14	120	55	65	30.0	111	160	10	2.3

Note! The pressure rating of the pipe unions can deviate from the nominal pressure rating of the ball valve.

Series 03 (non-soldering compression fittings with cutting ring DIN 2353 – heavy-duty series)

DN mm	RA mm	PN bar	D	i mm	L mm	B mm	H mm	h mm	Hg mm	R mm	SW1 mm	Weight kg
4	8	100	M 16x1.5	12	76	25	30	12.5	61	76	7	0.3
6	10	100	M 18x1.5	12	76	25	30	12.5	61	76	7	0.3
8	12	100	M 20x1.5	12	76	30	40	15.0	92	112	10	0.5
10	14	100	M 22x1.5	14	80	30	40	15.0	92	112	10	0.5
12	16	100	M 24x1.5	14	96	35	45	18.0	85	130	10	0.8
16	20	100	M 30x2.0	16	105	40	50	21.0	90	130	10	1.0
20	25	63	M 36x2.0	18	110	45	55	25.0	95	130	10	1.3
25	30	63	M 42x2.0	20	132*	55	65	31.0	111	160	10	2.3

*Deviating from the length V1, where necessary request special version in length V1.
Note! The pressure rating of the pipe unions can deviate from the nominal pressure rating of the ball valve.

Series 05 (flat sealing male pipe thread DIN EN ISO 228 - 1)

DN mm	PN bar	D	i mm	L mm	B mm	H mm	h mm	Hg mm	R mm	SW1 mm	Weight kg
4	100	G1/8"	10	66	25	30	12.5	61	76	7	0.3
6	100	G1/4"	11	68*	25	30	12.5	61	76	7	0.3
8	100	G3/8"	12	76*	30	40	15.0	92	112	10	0.5
10	100	G1/2"	12	80	30	40	15.0	92	112	10	0.5
15	100	G3/4"	14	103*	40	50	21.0	90	130	10	1.0
20	63	G1"	16	109*	45	55	25.0	95	130	10	1.3
25	63	G1 1/4"	18	128*	55	65	31.0	111	160	10	2.3

*Deviating from the length V1, where necessary request special version in length V1.

Series 44 (flat sealing NPT – male thread ANSI/ASME B 1.20.1)

DN mm	PN bar	D	i mm	L mm	B mm	H mm	h mm	Hg mm	R mm	SW1 mm	Weight kg
4	100	NPT 1/8"	9.5	69*	25	30	12.5	61	76	7	0.3
6	100	NPT 1/4"	14.5	79*	25	30	12.5	61	76	7	0.3
8	100	NPT 3/8"	14.5	84*	30	40	15.0	92	112	10	0.5
10	100	NPT 1/2"	19.0	93*	30	40	15.0	92	112	10	0.5
15	100	NPT 3/4"	19.0	113*	40	50	21.0	90	130	10	1.0
20	63	NPT 1"	24.0	125*	45	55	25.0	95	130	10	1.3
25	63	NPT 1 1/4"	24.5	141*	55	65	31.0	111	160	10	2.3

*Deviating from the length V1, where necessary request special version in length V1.

Example of order: Ball valve type NBA-C DN 12 made of steel with male thread for non-soldering compression fittings with cutting ring DIN 2353 – light-duty series (Series 02) **NBA-C 12 02**

Parts list NBA-C

Pos.	Designation	Material*
10	Body	Steel
20	Fitting	Steel
30	Ball	Brass
40	Seal	PTFE
50	Stop washer	Steel
60	Stem	Brass
70	Fitting	Brass
80	O-ring	NBR, FPM
90	Hand lever	Zinc die-casting
100	O-ring	NBR, FPM
110	Bolt	
120	Washer	
130	O-ring	NBR, FPM
140	Stop pin	

*Standard (can vary according to nominal width), other materials on request.
Due to the design, not all items are used for all nominal widths.

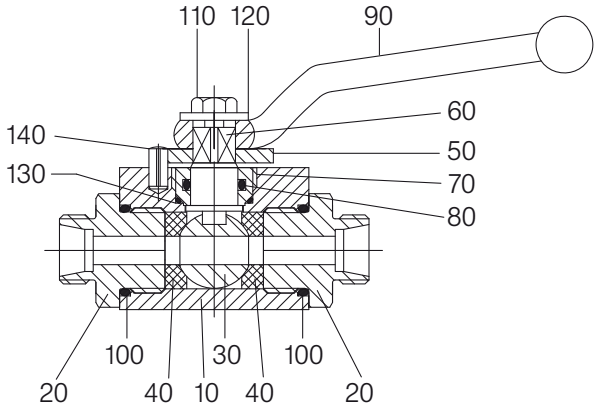

Please ask separately for requirements that exceed the standard conditions of use listed in this data sheet.
As a matter of principle, the safety information provided in the operating and servicing manual must be observed!
The operating and servicing manuals as well as the approval certificates can be downloaded at www.von-scheven.de.

We reserve the right to carry out technical modifications.

Low-pressure block ball valve NBA-D, Stainless steel

With male thread

DN 4 - 25 PN max. 100

Series 02 – male thread on both sides for non-soldering compression fittings with cutting ring DIN 2353 – light-duty series
03 – male thread on both sides for non-soldering compression fittings with cutting ring DIN 2353 – heavy-duty series
05 – male thread on both sides; flat sealing for pipe thread DIN EN ISO 228-1
44 – male thread on both sides; flat sealing NPT ANSI/ASME B 1.20.1

Face-to-face lengths DIN 3202 – 5 series V1

Temperature range Standard: -10°C to +150°C; DVGW -20°C to +60°C
On request: -50°C to +250°C

Range of use Liquids: Liquids group 1 and 2 according to PED 2014/68/EU Article 13
Gases: Liquids group 1 and 2 according to PED 2014/68/EU Article 13
As a matter of principle, the resistance to the flow medium must be ensured.

Approvals Series 02 and 03: DVGW for gas
PN 40 (PTFE), PN 63-100 (PTFE+GF)
TÜV-Component mark

Technical specification The NBA-D type ball valve consists of a block body with a connector screwed in on both sides. The stem features a blowout-proof design. Actuators can be attached by means of an extension kit.
This retrofit requirement must be specified when placing the order (additional charge).

1.060 EN 08/17

Technical data NBA-D

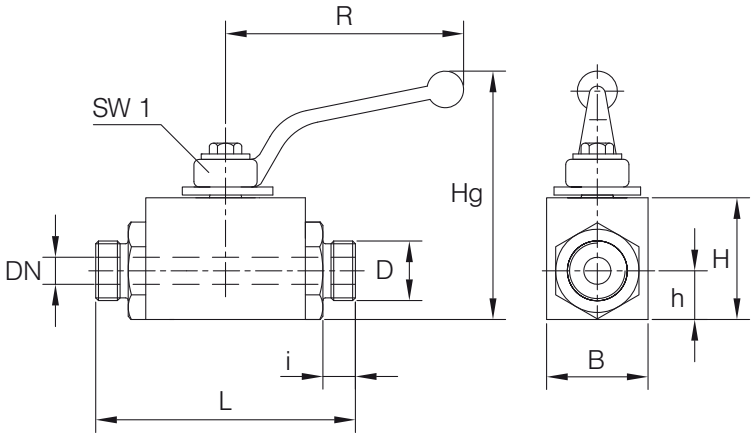

Series 02

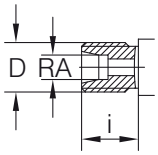

Series 03

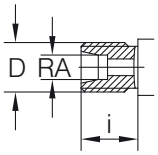

Series 05

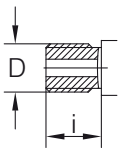

Series 44

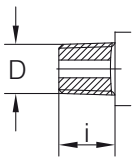

Series 02 (non-soldering compression fittings with cutting ring DIN 2353 light-duty series)

DN mm	RA mm	PN bar	D	i mm	L mm	B mm	H mm	h mm	Hg mm	R mm	SW1 mm	Weight kg
4	6	100	M 12x1.5	10	76	40	40	16	92	112	10	0.5
6	8	100	M 14x1.5	10	76	40	40	16	92	112	10	0.5
8	10	100	M 16x1.5	11	76	40	40	16	92	112	10	0.5
10	12	100	M 18x1.5	11	80	40	40	16	92	112	10	0.5
12	15	100	M 22x1.5	12	96	45	45	19	85	130	10	0.8
16	18	100	M 26x1.5	12	105	45	45	19	85	130	10	1.0
20	22	63	M 30x2.0	14	110	55	55	25	95	130	10	1.3
25	28	63	M 36x2.0	14	120	65	65	30	111	160	10	2.3

Note! The pressure rating of the pipe union can deviate from the nominal pressure rating of the ball valve.

Series 03 (non-soldering compression fittings with cutting ring DIN 2353 – heavy-duty series)

DN mm	RA mm	PN bar	D	i mm	L mm	B mm	H mm	h mm	Hg mm	R mm	SW1 mm	Weight kg
4	8	100	M 16x1.5	12	76	40	40	16	92	112	10	0.5
6	10	100	M 18x1.5	12	76	40	40	16	92	112	10	0.5
8	12	100	M 20x1.5	12	76	40	40	16	92	112	10	0.5
10	14	100	M 22x1.5	14	80	40	40	16	92	112	10	0.5
12	16	100	M 24x1.5	14	96	45	45	19	85	130	10	0.8
16	20	100	M 30x2.0	16	105	45	45	19	85	130	10	1.0
20	25	63	M 36x2.0	18	110	55	55	25	95	130	10	1.3
25	30	63	M 42x2.0	20	132*	65	65	30	111	160	10	2.3

*Deviating from the length V1; where necessary request special version in length V1.
Note! The pressure rating of the pipe union can deviate from the nominal pressure rating of the ball valve.

Series 05 (flat sealing for male pipe thread DIN EN ISO 228-1)

DN mm	PN bar	D	i mm	L mm	B mm	H mm	h mm	Hg mm	R mm	SW1 mm	Weight kg
4	100	G1/8"	10	76	40	40	16	92	112	7	0.5
6	100	G1/4"	11	76	40	40	16	92	112	7	0.5
8	100	G3/8"	12	76	40	40	16	92	112	10	0.5
10	100	G1/2"	12	80	40	40	16	92	112	10	0.5
15	100	G3/4"	14	100*	45	45	22	85	130	10	1.0
20	63	G1"	16	109*	55	55	25	95	130	10	1.3
25	63	G1 1/4"	18	128*	65	65	30	111	160	10	2.3

*Deviating from the length V1; where necessary request special version in length V1.

Series 44 (flat sealing NPT – male thread ANSI/ASME B 1.20.1)

DN mm	PN bar	D	i mm	L mm	B mm	H mm	h mm	Hg mm	R mm	SW1 mm	Weight kg
4	100	NPT 1/8"	9.5	73*	40	40	16	92	112	10	0.5
6	100	NPT 1/4"	15.0	88*	40	40	16	92	112	10	0.5
8	100	NPT 3/8"	14.5	89*	40	40	16	92	112	10	0.5
10	100	NPT 1/2"	19.0	93*	40	40	16	92	112	10	0.5
15	100	NPT 3/4"	19.0	113*	45	45	19	85	130	10	1.0
20	63	NPT 1"	24.0	125*	55	55	25	95	130	10	1.3
25	63	NPT 1 1/4"	24.5	141*	65	65	30	111	160	10	2.3

*Deviating from the length V1; where necessary request special version in length V1.

Example of order: Ball valve type NBA-D DN 12 of stainless steel with male thread for non-soldering compression fittings with cutting ring DIN 2353 – light-duty series (Series 02)
NBA-D 12 02

Parts list NBA-D

Pos.	Benennung	Material*
10	Body	Stainless steel
20	Fitting	Stainless steel
30	Ball	Stainless steel
40	Seal	PTFE
50	Stop washer	Stainless steel
60	Stem	Stainless steel
80	O-ring	NBR, FPM
90	Hand lever	Zinc die-casting
100	O-ring	NBR, FPM
110	Bolt	
120	Washer	
130	Sliding ring	PTFE
140	Stop pin	

*Standard (can vary according to nominal width), other materials on request.
Due to the design, not all items are used for all nominal widths.

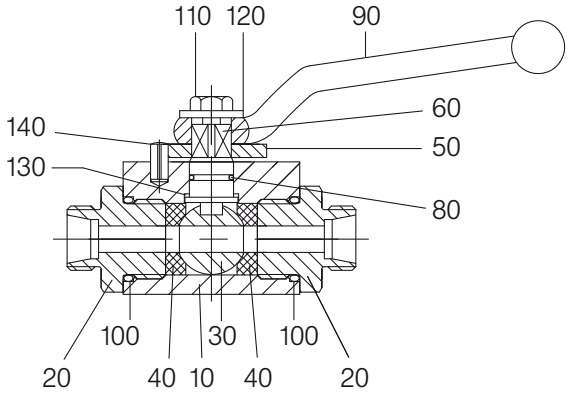

Please ask separately for requirements that exceed the standard conditions of use listed in this data sheet.
As a matter of principle, the safety information provided in the operating and servicing manual must be observed!
The operating and servicing manuals as well as the approval certificates can be downloaded at www.von-scheven.de.

We reserve the right to carry out technical modifications.

High-pressure block ball valve HBA-C, steel

With male thread

DN 4 - 25 **PN max. 500**

Series 02 – male thread on both sides for non-soldering compression fittings with cutting ring DIN 2353 – light-duty series
03 – male thread on both sides for non-soldering compression fittings with cutting ring DIN 2353 – heavy-duty series
05 – male thread on both sides flat sealing for pipe thread DIN EN ISO 228-1
44 – male thread on both sides for flat sealing NPT ANSI/ASME B 1.20.1

Face-to-face lengths DIN 3202 – 5 series V1

Temperature range Standard: -10°C to +90°C
On request: -50°C to +250°C

Range of use Liquids: Liquids group 1 and 2 according to PED 2014/68/EU Article 13
Gases: Liquids group 1 and 2 according to PED 2014/68/EU Article 13
As a matter of principle, the resistance to the flow medium must be ensured.

Technical specification The HBA-C type ball valve consists of a block body with connector screwed in on both sides. The stem is fitted blowout-proof from the outside. Simple replacement of the stem seal is ensured by the fitting used. Actuators can be attached by means of an extension kit. This retrofit requirement must be specified when placing the order (additional charge).

1.070 EN 08/17

Technical data HBA-C

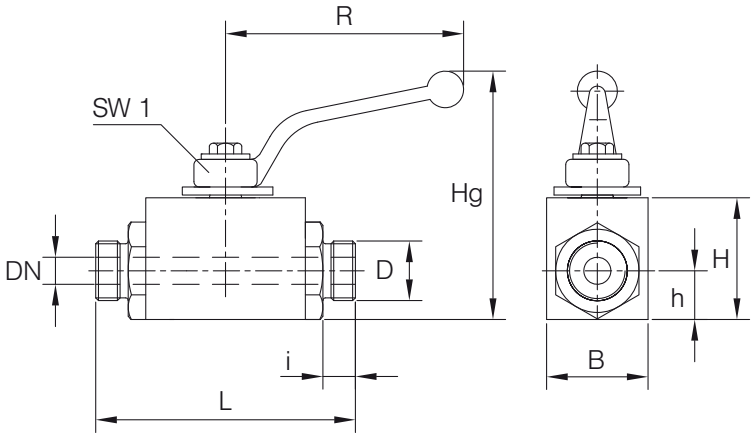

Series 02

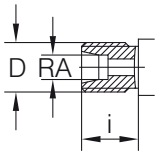

Series 03

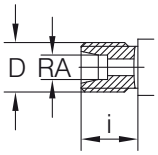

Series 05

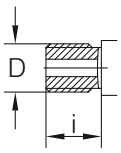

Series 44

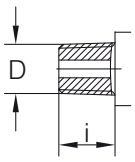

Series 02 (non-soldering compression fittings with cutting ring DIN 2353 light-duty series)

DN mm	RA mm	PN bar	D	i mm	L mm	B mm	H mm	h mm	Hg mm	R mm	SW1 mm	Weight kg
4	6	500	M 12x1.5	10	76	25	30	12.5	61	76	7	0.3
6	8	500	M 14x1.5	10	76	25	30	12.5	61	76	7	0.3
8	10	500	M 16x1.5	11	76	30	40	15.0	92	112	10	0.5
10	12	500	M 18x1.5	11	80	30	40	15.0	92	112	10	0.5
12	15	500	M 22x1.5	12	96	35	45	18.0	85	130	10	0.8
16	18	500	M 26x1.5	12	105	40	50	21.0	90	130	10	1.0
20	22	400	M 30x2	14	110	45	55	25.0	95	130	10	1.3
25	28	400	M 36x2	14	120	55	65	30.0	111	160	10	2.3

Note! The pressure rating of the pipe unions can deviate from the nominal pressure rating of the ball valve.

Series 03 (non-soldering compression fittings with cutting ring DIN 2353 – heavy-duty series)

DN mm	RA mm	PN bar	D	i mm	L mm	B mm	H mm	h mm	Hg mm	R mm	SW1 mm	Weight kg
4	8	500	M 16x1.5	12	76	25	30	12.5	61	76	7	0.3
6	10	500	M 18x1.5	12	76	25	30	12.5	61	76	7	0.3
8	12	500	M 20x1.5	12	76	30	40	15.0	92	112	10	0.5
10	14	500	M 22x1.5	14	80	30	40	15.0	92	112	10	0.5
12	16	500	M 24x1.5	14	96	35	45	18.0	85	130	10	0.8
16	20	500	M 30x2	16	105	40	50	21.0	90	130	10	1.0
20	25	400	M 36x2	18	110	45	55	25.0	95	130	10	1.3
25	30	400	M 42x2	20	132 *	55	65	31.0	111	160	10	2.3

* Deviating from the length V1, where necessary request special version in length V1.
Note! The pressure rating of the pipe unions can deviate from the nominal pressure rating of the ball valve.

Series 05 (flat sealing male pipe thread DIN EN ISO 228 - 1)

DN mm	PN bar	D	i mm	L mm	B mm	H mm	h mm	Hg mm	R mm	SW1 mm	Weight kg
4	500	G1/8"	10	66*	25	30	12.5	61	76	7	0.3
6	500	G1/4"	11	68*	25	30	12.5	61	76	7	0.3
8	500	G3/8"	12	76	30	40	15.0	92	112	10	0.5
10	500	G1/2"	12	80*	30	40	15.0	92	112	10	0.5
15	500	G3/4"	14	103*	40	50	21.0	90	130	10	1.0
20	400	G1"	16	109*	45	55	25.0	95	130	10	1.3
25	400	G1"	18	128*	55	65	31.0	111	160	10	2.3

*Deviating from the length V1, where necessary request special version in length V1.

Series 44 (flat sealing NPT – male thread ANSI/ASME B 1.20.1)

DN mm	PN bar	D	i mm	L mm	B mm	H mm	h mm	Hg mm	R mm	SW1 mm	Weight kg
4	500	NPT 1/8"	9.5	69*	25	30	12.5	61	76	7	0.3
6	500	NPT 1/4"	14.5	79*	25	30	12.5	61	76	7	0.3
8	500	NPT 3/8"	14.5	84*	30	40	15.0	92	112	10	0.5
10	500	NPT 1/2"	19.0	93*	30	40	15.0	92	112	10	0.5
15	500	NPT 3/4"	19.0	113*	40	50	21.0	90	130	10	1.0
20	400	NPT 1"	24.0	125*	45	55	25.0	95	130	10	1.3
25	400	NPT 1 1/4"	24.5	141*	55	65	31.0	111	160	10	2.3

*Deviating from the length V1, where necessary request special version in length V1.

Example of order: Ball valve type HBA-C DN 12 made of steel with male thread for non-soldering compression fittings with cutting ring DIN 2353 – light-duty series (Series 02)
HBA-C 12 02

Parts list HBA-C

Pos.	Designation	Material*
10	Body	Steel
20	Fitting	Steel
30	Ball	Steel
40	Seal	POM
50	Stop washer	Steel
60	Stem	Steel
70	Fitting	Brass
80	O-ring	NBR
90	Hand lever	Zinc die-casting
100	O-ring	NBR
110	Bolt	
120	Washer	
130	O-ring	NBR
140	Stop pin	

*Standard (can vary according to nominal width), other materials on request.
Due to the design, not all items are used for all nominal widths.

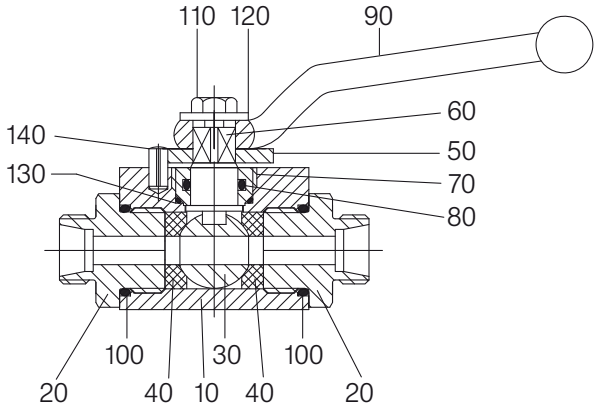

Please ask separately for requirements that exceed the standard conditions of use listed in this data sheet.
As a matter of principle, the safety information provided in the operating and servicing manual must be observed!
The operating and servicing manuals as well as the approval certificates can be downloaded at www.von-scheven.de.

We reserve the right to carry out technical modifications.

High-pressure block ball valve HBA-D, stainless steel

With male thread

DN 4 - 25 **PN max. 500**

Series
02 – male thread on both sides for non-soldering compression fittings with cutting ring DIN 2353 – light-duty series
03 – male thread on both sides for non-soldering compression fittings with cutting ring DIN 2353 – heavy-duty series
05 – male thread on both sides flat sealing for pipe thread DIN EN ISO 228 - 1
44 – male thread on both sides flat sealing NPT ANSI/ASME B 1.20.1

Face-to-face lengths
DIN 3202 – 5 series V1

Temperature range
Standard: -10°C to +90°C
On request: -50°C to +250°C

Range of use
Liquids: Liquids group 1 and 2 according to PED 2014/68/EU Article 13
Gases: Liquids group 1 and 2 according to PED 2014/68/EU Article 13
As a matter of principle, the resistance to the flow medium must be ensured.

Technical specification
The HBA-D type ball valve consists of a block body with connector screwed in on both sides. The stem is fitted blowout-proof. Actuators can be attached by means of an extension kit. This retrofit requirement must be specified when placing the order (additional charge).

1.080 EN 08/17

Technical data HBA-D

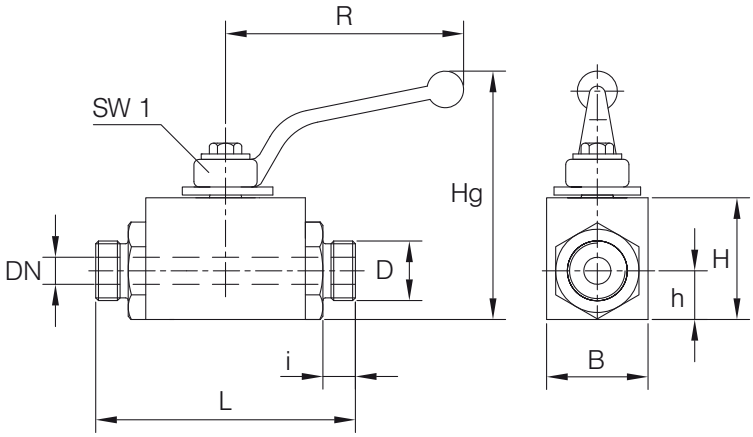

Series 02

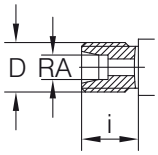

Series 03

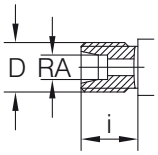

Series 05

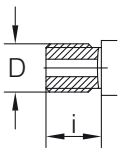

Series 44

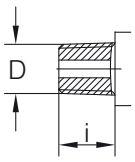

Series 02 (non-soldering compression fittings with cutting ring DIN 2353 light-duty series)

DN mm	RA mm	PN bar	D	i mm	L mm	B mm	H mm	h mm	Hg mm	R mm	SW1 mm	Weight kg
4	6	500	M 12x1.5	10	76	40	40	16	92	112	10	0.5
6	8	500	M 14x1.5	10	76	40	40	16	92	112	10	0.5
8	10	500	M 16x1.5	11	76	40	40	16	92	112	10	0.5
10	12	500	M 18x1.5	11	80	40	40	16	92	112	10	0.5
12	15	500	M 22x1.5	12	96	45	45	18	85	130	10	0.8
16	18	500	M 26x1.5	12	105	45	45	19	85	130	10	1.0
20	22	400	M 30x2	14	110	55	55	25	95	130	10	1.3
25	28	400	M 36x2	14	120	65	65	30	111	160	10	2.3

Note! The pressure rating of the pipe unions can deviate from the nominal pressure rating of the ball valve.

Series 03 (non-soldering compression fittings with cutting ring DIN 2353 – heavy-duty series)

DN mm	RA mm	PN bar	D	i mm	L mm	B mm	H mm	h mm	Hg mm	R mm	SW1 mm	Weight kg
4	8	500	M 16x1.5	12	76	40	40	16	92	112	10	0.5
6	10	500	M 18x1.5	12	76	40	40	16	92	112	10	0.5
8	12	500	M 20x1.5	12	76	40	40	16	92	112	10	0.5
10	14	500	M 22x1.5	14	80	40	40	16	92	112	10	0.5
12	16	500	M 24x1.5	14	96	45	45	19	85	130	10	0.8
16	20	500	M 30x2	16	105	45	45	19	85	130	10	1.0
20	25	400	M 36x2	18	110	55	55	25	95	130	10	1.3
25	30	400	M 42x2	20	132 *	65	65	30	111	160	10	2.3

* Deviating from the length V1, where necessary request special version in length V1.
Note! The pressure rating of the pipe unions can deviate from the nominal pressure rating of the ball valve.

Series 05 (flat sealing male pipe thread DIN EN ISO 228-1)

DN mm	PN bar	D	i mm	L mm	B mm	H mm	h mm	Hg mm	R mm	SW1 mm	Weight kg
4	500	G1/8"	10	76	40	40	11.5	61.5	76	7	0.3
6	500	G1/4"	11	77*	40	40	11.5	61.5	76	7	0.3
8	500	G3/8"	12	76	40	40	16.0	92.0	112	10	0.5
10	500	G1/2"	12	82*	40	40	16.0	92.0	112	10	0.5
15	400	G3/4"	14	100*	45	45	22.0	90.0	130	10	1.0
20	500	G1"	16	109*	55	55	25.0	95.0	130	10	1.3
25	500	G1 1/4"	18	129*	65	65	30.0	113.0	160	10	2.3

*Deviating from the length V1, where necessary request special version in length V1.

Series 44 (flat sealing NPT – male thread ANSI/ASME B 1.20.1)

DN mm	PN bar	D	i mm	L mm	B mm	H mm	h mm	Hg mm	R mm	SW1 mm	Weight kg
4	500	NPT 1/8"	9.5	73*	40	40	16	92	112	10	0.5
6	500	NPT 1/4"	14.5	88*	40	40	16	92	112	10	0.5
8	500	NPT 3/8"	14.5	89*	40	40	16	92	112	10	0.5
10	500	NPT 1/2"	19.0	93*	40	40	16	92	112	10	0.5
15	500	NPT 3/4"	19.0	113*	45	45	19	85	130	10	1.0
20	400	NPT 1"	24.0	125*	55	55	25	95	130	10	1.3
25	400	NPT 1 1/4"	24.5	141*	65	65	30	111	160	10	2.3

*Deviating from the length V1, where necessary request special version in length V1.

Example of order: Ball valve type HBA-D DN 12 made of stainless steel with male thread for non-soldering compression fittings with cutting ring DIN 2353 – light-duty series (Series 02)
HBA-D 12 02

Parts list HBA-D

Pos.	Designation	Material*
10	Body	Stainless steel
20	Fitting	Stainless steel
30	Ball	Stainless steel
40	Seal	POM
50	Stop washer	Stainless steel
60	Stem	Stainless steel
80	O-ring	NBR
90	Hand lever	Zinc die-casting
100	O-ring	NBR
110	Bolt	
120	Washer	
130	Sliding ring	PTFE
140	Stop pin	

*Standard (can vary according to nominal width), other materials on request.
Due to the design, not all items are used for all nominal widths.

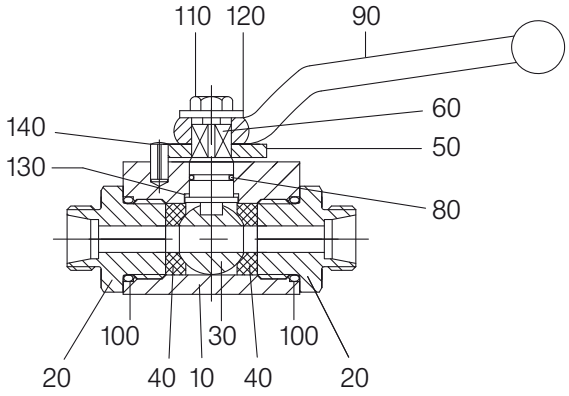

Please ask separately for requirements that exceed the standard conditions of use listed in this data sheet.
As a matter of principle, the safety information provided in the operating and servicing manual must be observed!
The operating and servicing manuals as well as the approval certificates can be downloaded at www.von-scheven.de.

We reserve the right to carry out technical modifications.

Low-pressure ball valve NSKI-C, steel

With female thread

DN 8 - 80 **PN max. 100**

Series 06 – female thread on both sides DIN EN ISO 228-1
42 – NPT female thread ANSI /ASME B1.20.1

Face-to-face lengths DIN 3202 – 4 series M3

Temperature range Standard: -10°C to +150°C; DVGW -20°C to +60°C
On request: -50°C to +250°C

Range of use Liquids: Liquids group 1 and 2 according to PED 2014/68/EU Article 13
Gases: Liquids group 1 and 2 according to PED 2014/68/EU Article 13
As a matter of principle, the resistance to the flow medium must be ensured.

Approvals Series 06: DVGW for gas PN 16 (DN 8-50)

Technical specification The NSKI-C type ball valve consists of a forged body with connector screwed in on one or both sides. The stem is blowout-proof. Up to nominal width DN 25, the stem is fitted from the outside by means of a fitting. Simple replacement of the stem seal is ensured by the fitting used. A stem seal in accordance with the German Technical Instructions on Air Quality Control (TA Luft) is available as standard from nominal width DN 32 and can be used, on request, up to nominal width DN 25 for an additional charge. Actuators can be attached, from nominal width DN 32, by means of an extension kit. This retrofit requirement is available as standard.

Please ask separately for requirements that exceed the standard conditions of use listed in this data sheet.
As a matter of principle, the safety information provided in the operating and servicing manual must be observed!
The operating and servicing manuals as well as the approval certificates can be downloaded at www.von-scheven.de.

We reserve the right to carry out technical modifications.

1.090 EN 08/17

Technical data NSKI-C

Series 06

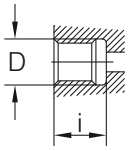

Series 42

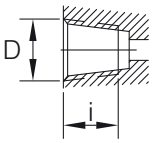

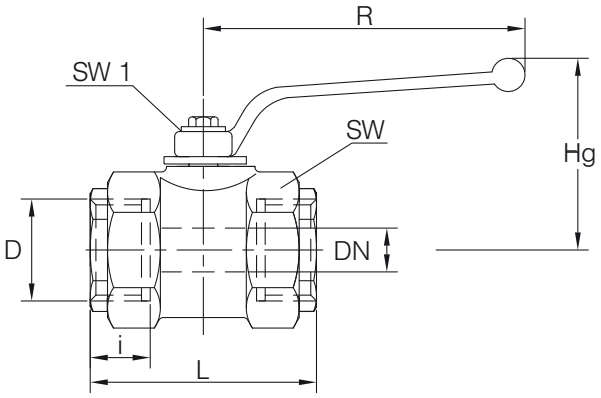

Series 06 (pipe female thread DIN EN ISO 228-1)

DN mm	PN bar	D	i mm	L mm	SW mm	Hg mm	R mm	SW1 mm	Weight kg
8	100	G1/4"**	12.5	60*	32	77	112	10	0.4
10	100	G3/8"**	12.5	60	32	77	112	10	0.4
15	100	G1/2"**	16.0	75	40	67	130	10	0.9
20	63	G3/4"**	18.0	80	46	71	130	10	0.9
25	63	G1"**	20.0	90	55	82	160	10	1.4
32	40	G1 1/4"**	22.0	110	Ø 76	117	250	17	3.0
40	40	G1 1/2"**	23.0	120	Ø 90	121	250	17	3.6
50	40	G2"**	26.0	140	Ø100	128	250	17	5.5
65	40	G2 1/2"	31.0	185	Ø133	158	250	17	11.8
80	40	G3"	35.0	205	Ø155	182	350	22	15.6

*Deviating from face-to-face length M3; where necessary request face-to-face lengths in special versio.
**DVGW: G+Rp

Series 42 (NPT female thread ANSI/ASME B 1.20.1)

DN mm	PN bar	D	i mm	L mm	SW mm	Hg mm	R mm	SW1 mm	Weight kg
8	100	NPT 1/4"	12.5	60*	32	77	112	10	0.4
10	100	NPT 3/8"	12.5	60	32	77	112	10	0.4
15	100	NPT 1/2"	15.0	75	40	67	130	10	0.9
20	63	NPT 3/4"	18.0	80	46	71	130	10	0.9
25	63	NPT 1"	20.0	90	55	82	160	10	1.4
32	40	NPT 1 1/4"	17.3	110	Ø 76	117	250	17	3.0
40	40	NPT 1 1/2"	22.0	120	Ø 90	121	250	17	3.6
50	40	NPT 2"	18.0	140	Ø100	128	250	17	5.5

*Deviating from face-to-face length M3; where necessary request face-to-face lengths in special version.

Example of order: Ball valve type NSKI-C made of steel, DN 20 with female thread DIN EN ISO 228 - 1 **NSKI-C 20 06**

Parts list NSKI-C

Pos.	Designation	Material
10	Body	Forged steel
20	Fitting	Steel
30	Ball	Brass
40	Seal	PTFE
50	Stop washer	Steel
60	Stem	Brass
70	Fitting	Brass
80	O-ring	NBR, FPM
90	Hand lever	Zinc die-casting
100	O-ring	NBR, FPM
110	Bolt	
120	Washer	
130	O-ring	NBR, FPM
140	Stop pin	

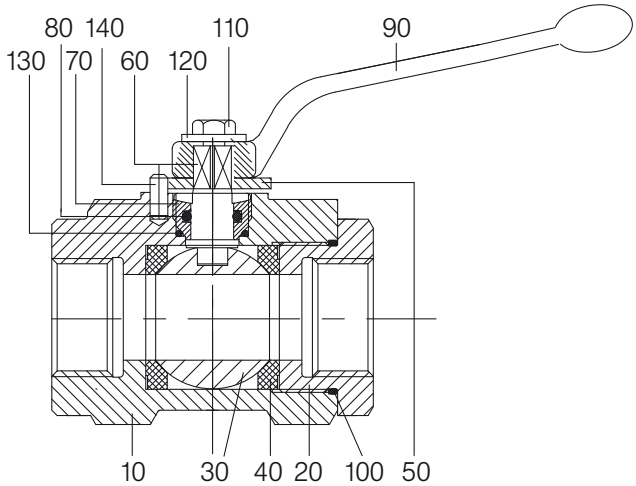

*Standard (can vary according to nominal width), other materials on request.
Due to the design, not all items are used for all nominal widths.

Low-pressure ball valve NSKI-D, stainless steel

With female thread

DN 32 - 50 PN max. 40
Up to DN 25 please revert to type NBI-D.

Series 06 - female thread on both sides DIN EN ISO 228-1
42 - NPT female thread ANSI/ASME B1.20.1

Face-to-face lengths DIN 3202 – 4 series M3

Temperature range Standard: -10°C to +150°C; DVGW -20°C to +60°C
On request: -50°C to +250°C

Range of use Liquids: Liquids group 1 and 2 according to PED 2014/68/EU Article 13
Gases: Liquids group 1 and 2 according to PED 2014/68/EU Article 13
As a matter of principle, the resistance to the flow medium must be ensured.

Approvals Series 06: DVGW for gas PN 16
TA Luft

Technical specification The NSKI-D type ball valve consists of a forged body with connector screwed in on one or both sides. A stem seal in accordance with the German Technical Instructions on Air Quality Control (TA Luft) is available as standard from nominal width DN 32. Actuators can be attached, from nominal width DN 32, by means of an extension kit. This retrofit requirement is available as standard.

Please ask separately for requirements that exceed the standard conditions of use listed in this data sheet.
As a matter of principle, the safety information provided in the operating and servicing manual must be observed!
The operating and servicing manuals as well as the approval certificates can be downloaded at www.von-scheven.de.

We reserve the right to carry out technical modifications.

1.100 EN 08/17

Technical data NSKI-D

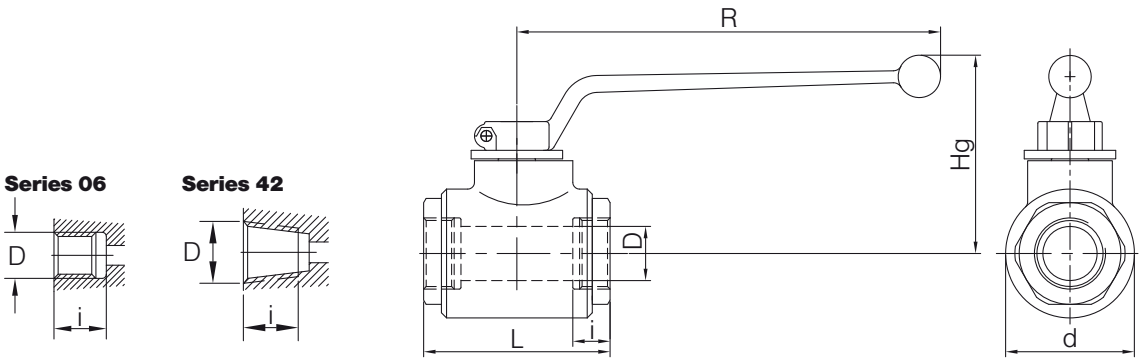

Series 06 (pipe female thread DIN EN ISO 228-1)

DN mm	PN bar	D	i mm	L mm	d mm	Hg mm	R mm	SW1 mm	Weight kg
32	40	G1 1/4"*	22	110	Ø 76	117	250	17	3.0
40	40	G1 1/2"*	23	120	Ø 90	121	250	17	3.6
50	40	G2"*	26	140	Ø100	128	250	17	5.5

*DVGW: G+Rp

Series 42 (NPT female thread ANSI /ASME B 1.20.1)

DN mm	PN bar	D	i mm	L mm	d mm	Hg mm	R mm	SW1 mm	Weight kg
32	40	NPT1 1/4	22	110	Ø 76	117	250	17	3.0
40	40	NPT1 1/2	23	120	Ø 90	121	250	17	3.6
50	40	NPT 2	26	140	Ø100	128	250	17	5.5

Example of order: Ball valve type NSKI-D made of stainless steel, DN 32 with female thread DIN EN ISO 228-1
NSKI-D 32 06

Parts list NSKI-D

Pos.	Designation	Material*
10	Body	Stainless steel
20	Fitting	Stainless steel
30	Ball	Stainless steel
40	Seal	PTFE
50	Stop washer	Stainless steel
60	Stem	Stainless steel
80	O-ring	NBR, FPM
90	Hand lever	Zinc die-casting
100	O-ring	NBR, FPM
110	Bolt	
120	Nut	
130	Sliding ring	PTFE
140	Stop pin	

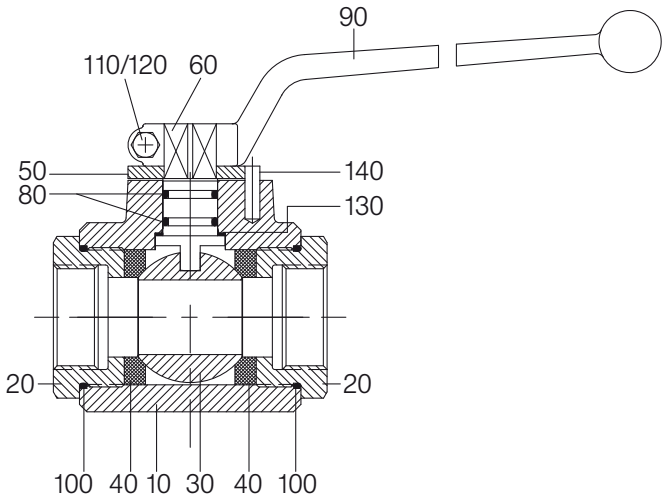

*Standard (can vary according to nominal width), other materials on request.
Due to the design, not all items are used for all nominal widths.

High-pressure ball valve HSKI-C, steel

With female thread

DN 6 - 80 **PN max. 500**

Series 06 – female thread on both sides DIN EN ISO 228-1
42 – NPT female thread ANSI/ASME B1.20.1

Face-to-face lengths DIN 3202 – 4 series M3

Temperature range Standard: -10°C to +90°C
On request: -50°C to +250°C

Range of use Liquids: Liquids group 1 and 2 according to PED 2014/68/EU Article 13
Gases: Liquids group 1 and 2 according to PED 2014/68/EU Article 13
As a matter of principle, the resistance to the flow medium must be ensured.

Technical specification The HSKI-C type ball valve consists of a forged body with connector screwed in on one or both sides. The stem is blowout-proof. Up to nominal width DN 25, the stem is fitted from the outside by means of a fitting. Simple replacement of the stem seal is ensured by the fitting used. A stem seal in accordance with the German Technical Instructions on Air Quality Control (TA Luft) is available as standard from nominal width DN 32 and can be used, on request, up to nominal width DN 25 for an additional charge. Actuators can be attached, from nominal width DN 32, by means of an extension kit. This retrofit requirement is available as standard.

Please ask separately for requirements that exceed the standard conditions of use listed in this data sheet.
As a matter of principle, the safety information provided in the operating and servicing manual must be observed!
The operating and servicing manuals as well as the approval certificates can be downloaded at www.von-scheven.de.

We reserve the right to carry out technical modifications.

1.110 EN 08/17

Technical data HSKI-C

Series 06

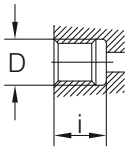

Series 42

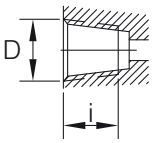

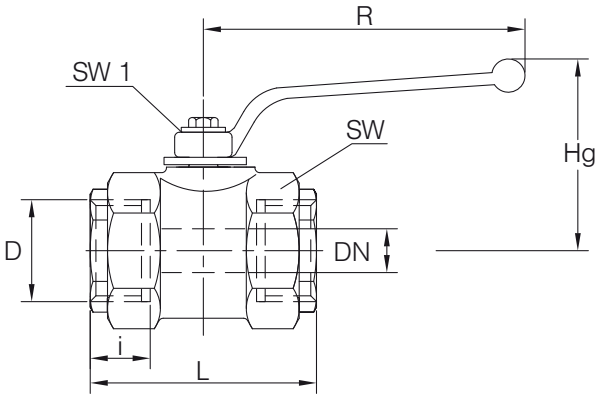

Series 06 (pipe female thread DIN EN ISO 228-1)

DN mm	PN bar	D	i mm	L mm	SW mm	Hg mm	R mm	SW1 mm	Weight kg
6	500	G 1/4"	12.5	60*	32	77	112	10	0.4
10	500	G 3/8"	12.5	60	32	77	112	10	0.4
15	500	G 1/2"	16.0	75	Ø 40	67	130	10	0.9
20	320	G 3/4"	18.0	80	46	71	130	10	0.9
25	320	G 1"	20.0	90	55	82	160	10	1.4
32*	320**	G 1 1/4"	22.0	110	Ø 76	117	250	17	3.0
40*	320**	G 1 1/2"	23.0	130*	Ø 90	121	250	17	3.6
50*	320**	G 2"	26.0	140	Ø100	128	250	17	5.5
65	160	G 2 1/2"	31.0	185	Ø133	158	250	17	11.8
80	63	G 3"	35.0	205	Ø152	182	350	22	15.6

*Deviating from face-to-face length M3; where necessary request face-to-face lengths in special version.
**On request, a light-duty version (pressure rating PN 160) with altered face-to-face length is also available.

Series 42 (NPT female thread ANSI/ASME B 1.20.1)

DN mm	PN bar	D	i mm	L mm	SW mm	Hg mm	R mm	SW1 mm	Weight kg
6	500	NPT 1/4"	12.5	60*	32	77	112	10	0.4
10	500	NPT 3/8"	12.5	60	32	77	112	10	0.4
15	500	NPT 1/2"	15.0	75	Ø 40	67	130	10	0.9
20	320	NPT 3/4"	18.0	80	46	71	130	10	0.9
25	320	NPT 1"	20.0	90	55	82	160	10	1.4
32	320**	NPT 1 1/4"	22.0	110	Ø 76	117	250	17	3.0
40	320**	NPT 1 1/2"	23.0	130*	Ø 90	121	250	17	3.6
50	320**	NPT 2"	26.0	140	Ø100	128	250	17	5.5

*Deviating from face-to-face length M3; where necessary request face-to-face lengths in special version.
**On request, a light-duty version (pressure rating PN 160) with altered face-to-face length is also available.

Example of order: Ball valve type HSKI-C made of steel, DN 20 with female thread DIN EN ISO 228-1 **HSKI-C 20 06**

Parts list HSKI-C

Pos.	Designation	Material*
10	Body	Steel
20	Fitting	Steel
30	Ball	Steel
40	Seal	POM
50	Stop washer	Steel
60	Stem	Steel
70	Fitting	Brass
80	O-ring	NBR
90	Hand lever	Zinc die-casting
100	O-ring	NBR
110	Bolt	
120	Washer	
130	O-ring	NBR
140	Stop pin	

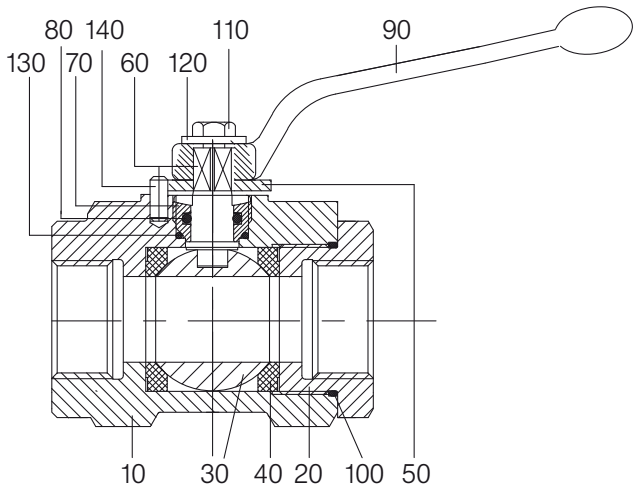

*Standard (can vary according to nominal width), other materials on request.
Due to the design, not all items are used for all nominal widths.

High-pressure ball valve HSKI-D, stainless steel

With female thread

DN 32-50 PN max. 320
Up to DN 25 please revert to type HBI-D.

Series 06 – female thread on both sides DIN EN ISO 228-1
42 – NPT female thread ANSI/ASME B1.20.1

Face-to-face lengths DIN 3202 – 4 series M3

Temperature range Standard: -10°C to +90°C
On request: -50°C to +250°C

Range of use Liquids: Liquids group 1 and 2 according to PED 2014/68/EU Article 13
Gases: Liquids group 1 and 2 according to PED 2014/68/EU Article 13
As a matter of principle, the resistance to the flow medium must be ensured.

Technical specification The HSKI-D type ball valve consists of a forged body with connector screwed in on one or both sides. A stem seal in accordance with the German Technical Instructions on Air Quality Control (TA Luft) is available as standard from nominal width DN 32. Actuators can be attached, from nominal width DN 32, by means of an extension kit. This retrofit requirement is available as standard.

Please ask separately for requirements that exceed the standard conditions of use listed in this data sheet.
As a matter of principle, the safety information provided in the operating and servicing manual must be observed!
The operating and servicing manuals as well as the approval certificates can be downloaded at www.von-scheven.de.

We reserve the right to carry out technical modifications.

1.120 EN 08/17

Technical data HSKI-D

Series 06

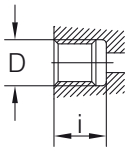

Series 42

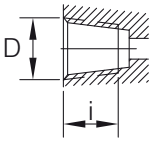

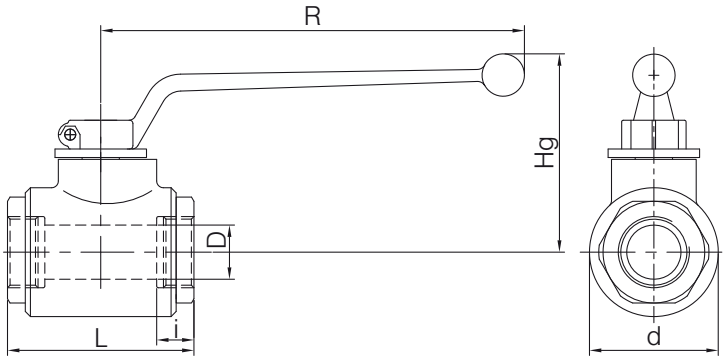

Series 06 (pipe female thread DIN EN ISO 228-1)

DN mm	PN bar	D	i mm	L mm	d mm	Hg mm	R mm	SW1 mm	Weight kg
32	320	G1 1/4"	22	110	Ø 76	117	250	17	3.0
40	320	G1 1/2"	23	130*	Ø 90	121	250	17	3.6
50	320	G2"	26	140	Ø100	128	250	17	5.5

*Deviating from face-to-face length M3; where necessary request face-to-face lengths in special version.
On request, a light-duty version (pressure rating PN 160) with altered face-to-face length is also available.

Series 42 (NPT female thread ANSI/ASME B 1.20.1)

DN mm	PN bar	D	i mm	L mm	d mm	Hg mm	R mm	SW1 mm	Weight kg
32	320	NPT1 1/4"	22	110	Ø 76	117	250	17	3.0
40	320	NPT1 1/2"	23	130*	Ø 90	121	250	17	3.6
50	320	NPT 2"	26	140	Ø100	128	250	17	5.5

*Deviating from face-to-face length M3; where necessary request face-to-face lengths in special version.
On request, a light-duty version (pressure rating PN 160) with altered face-to-face length is also available.

Example of order: Ball valve type HSKI-D made of stainless steel, DN 32 with female thread DIN EN ISO 228-1
HSKI-D 32 06

Parts list HSKI-D

Pos.	Designation	Material*
10	Body	Stainless steel
20	Fitting	Stainless steel
30	Ball	Stainless steel
40	Seal	POM
50	Stop washer	Stainless steel
60	Stem	Stainless steel
80	O-ring	NBR
90	Hand lever	Zinc die-casting
100	O-ring	NBR
110	Bolt	
130	Sliding ring	PTFE
140	Stop pin	

*Standard (can vary according to nominal width), other materials on request.
Due to the design, not all items are used for all nominal widths.

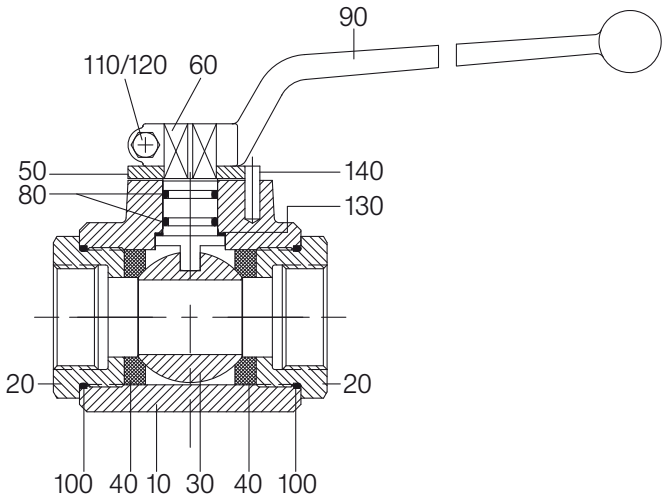

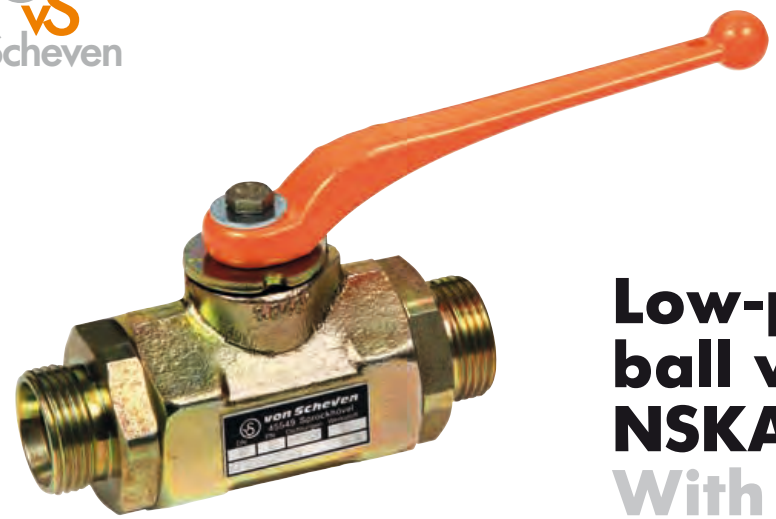

Low-pressure ball valve NSKA-C, steel

With male thread

DN 8 - 40 **PN max. 100**

Series 02 – male thread on both sides for non-soldering compression fittings with cutting ring DIN 2353 – light-duty series
03 – male thread on both sides for non-soldering compression fittings with cutting ring DIN 2353 – heavy-duty series
05 – male thread on both sides flat sealing for pipe thread DIN EN ISO 228-1
44 – male thread on both sides flat sealing NPT ANSI/ASME B 1.20.1

Face-to-face lengths DIN 3202 – 5 series V1

Temperature range Standard: -10°C to +150°C; DVGW -20°C to +60°C
On request: -50°C to +250°C

Range of use Liquids: Liquids group 1 and 2 according to PED 2014/68/EU Article 13
Gases: Liquids group 1 and 2 according to PED 2014/68/EU Article 13
As a matter of principle, the resistance to the flow medium must be ensured.

Approvals Series 02 and 03: DVGW for gas
PN 40 (PTFE) – DN 8-40, PN 63-100 (PTFE+GF) – DN 8-25
TÜV-Component mark

Technical specification The NSKA-C type ball valve consists of a forged body with connector screwed in on one or both sides. The stem is blowout-proof. Up to nominal width DN 25, the stem is fitted from the outside by means of a fitting. Simple replacement of the stem seal is ensured by the fitting used. A stem seal in accordance with the German Technical Instructions on Air Quality Control (TA Luft) is available as standard from nominal width DN 32 and can be used, on request, up to nominal width DN 25 for an additional charge. Actuators can be attached, from nominal width DN 32, by means of an extension kit. This retrofit requirement is available as standard.

1.130 EN 08/17

Technical data NSKA-C

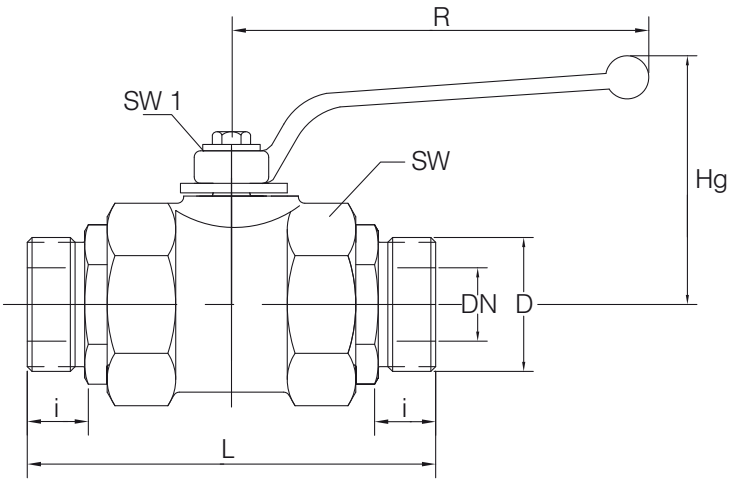

Series 02

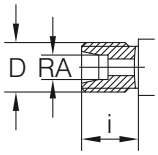

Series 03

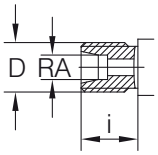

Series 05

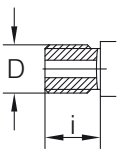

Series 44

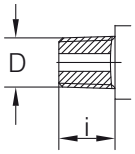

Series 02 (for non-soldering compression fittings with cutting ring DIN 2353, light-duty series)

DN mm	RA mm	PN bar	D	i mm	L mm	SW mm	Hg mm	R mm	SW1 mm	Weight kg
8	10	100	M 16x1.5	11	76	32	77	112	10	0.4
10	12	100	M 18x1.5	11	80	32	77	112	10	0.4
12	15	100	M 22x1.5	12	96	Ø40	67	130	10	0.6
16	18	100	M 26x1.5	12	105	Ø40	69	130	10	1.0
20	22	63	M 30x2	14	110	46	71	130	10	1.0
25	28	63	M 36x2	14	120	55	82	160	10	1.6
32	35	40	M 45x2	16	145	Ø76	117	250	17	3.5
40	42	40	M 52x2	16	150	Ø90	121	250	17	4.1

Note! The pressure rating of the pipe unions can deviate from the nominal pressure rating of the ball valve.

Series 03 (for non-soldering compression fittings with cutting ring DIN 2353, heavy-duty series)

DN mm	RA mm	PN bar	D	l mm	L mm	SW mm	Hg mm	R mm	SW1 mm	Weight kg
8	12	100	M 20x1.5	12	76	32	77	112	10	0.4
10	14	100	M 22x1.5	14	80	32	77	112	10	0.4
12	16	100	M 24x1.5	14	96	Ø40	67	130	10	0.6
16	20	100	M 30x2	16	105	Ø40	69	130	10	1.0
20	25	63	M 36x2	18	110	46	71	130	10	1.0
25	30	63	M 42x2	20	132*	55	82	160	10	1.6
32	38	25	M 52x2	22	145	Ø76	117	250	17	3.5

*Deviating from the length V1, where necessary request special version in length V1.
Note! The pressure rating of the pipe unions can deviate from the nominal pressure rating of the ball valve.

Series 05 (for flat sealing NPT - male thread ANSI/ASME B 1.20.1)

DN mm	PN bar	D	i mm	L mm	SW mm	Hg mm	R mm	SW1 mm	Weight kg
8	100	G3/8"	12	76	32	77	112	10	0.4
10	100	G1/2"	12	80	32	77	112	10	0.4
15	100	G3/4"	14	103*	Ø40	69	130	10	1.0
20	63	G1"	16	109*	46	71	130	10	1.0
25	63	G1 1/4"	18	128*	55	82	160	10	1.6

*Deviating from the length V1, where necessary request special version in length V1.

Series 44 (for flat sealing NPT – male thread ANSI/ASME B 1.20.1)

DN mm	PN bar	D	i mm	L mm	SW mm	Hg mm	R mm	SW1 mm	Weight kg
6	100	NPT 1/4"	14.5	84*	32	77	112	10	0.4
8	100	NPT 3/8"	14.5	84*	32	77	112	10	0.4
10	100	NPT 1/2"	19.0	93*	Ø40	67	130	10	0.6
15	100	NPT 3/4"	19.0	113*	Ø40	69	130	10	1.0
20	63	NPT 1"	24.0	125*	46	71	130	10	1.0
25	63	NPT 1 1/4"	24.5	141*	55	82	160	10	1.6

*Deviating from the length V1, where necessary request special version in length V1.

Example of order: Ball valve type NSKA-C made of steel, DN 12 with male thread for non-soldering compression fittings with cutting ring DIN 2353 – light-duty series
NSKA-C 12 02

Parts list NSKA-C

Pos.	Designation	Material*
10	Body	Steel
20	Fitting	Steel
30	Ball	Steel, brass
40	Seal	PTFE
50	Stop washer	Steel
60	Stem	Steel, brass
70	Fitting	Brass
80	O-ring	NBR, FPM
90	Hand lever	Zinc die-casting
100	O-ring	NBR, FPM
110	Bolt	
120	Washer	
130	O-ring	NBR, FPM
140	Stop pin	

*Standard (can vary according to nominal width), other materials on request.
Due to the design, not all items are used for all nominal widths.

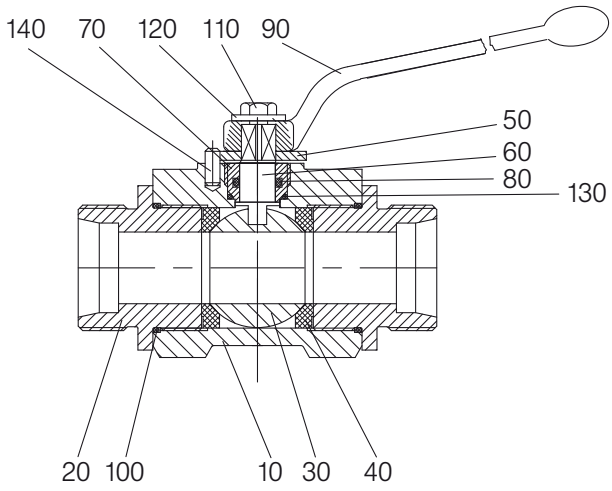

Please ask separately for requirements that exceed the standard conditions of use listed in this data sheet.
As a matter of principle, the safety information provided in the operating and servicing manual must be observed!
The operating and servicing manuals as well as the approval certificates can be downloaded at www.von-scheven.de.

We reserve the right to carry out technical modifications.

Low-pressure ball valve NSKA-D, stainless steel

With male thread

DN 32 - 40 PN 40
Up to DN 25 please revert to type NBA-D.

Series 02 – male thread on both sides for non-soldering compression fittings with cutting ring DIN 2353 - light-duty series
03 – male thread on both sides for non-soldering compression fittings with cutting ring DIN 2353 – heavy-duty series

Face-to-face lengths DIN 3202 – 5 series V1

Temperature range Standard: -10°C to +150°C; DVGW -20°C to +60°C
On request: -50°C to +250°C

Range of use Liquids: Liquids group 1 and 2 according to PED 2014/68/EU Article 13
Gases: Liquids group 1 and 2 according to PED 2014/68/EU Article 13
As a matter of principle, the resistance to the flow medium must be ensured.

Approvals DVGW for gas
TÜV-Component mark

Technical specification The NSKA-D type ball valve consists of a forged body with connector screwed in on one or both sides. The stem is blowout-proof.
A stem seal in accordance with the German Technical Instructions on Air Quality Control (TA Luft) is available as standard from nominal width DN 32. Actuators can be attached, from nominal width DN 32, by means of an extension kit. This retrofit requirement is available as standard.

Please ask separately for requirements that exceed the standard conditions of use listed in this data sheet.
As a matter of principle, the safety information provided in the operating and servicing manual must be observed!
The operating and servicing manuals as well as the approval certificates can be downloaded at www.von-scheven.de.

We reserve the right to carry out technical modifications.

1.140 EN 08/17

Technical data NSKA-D

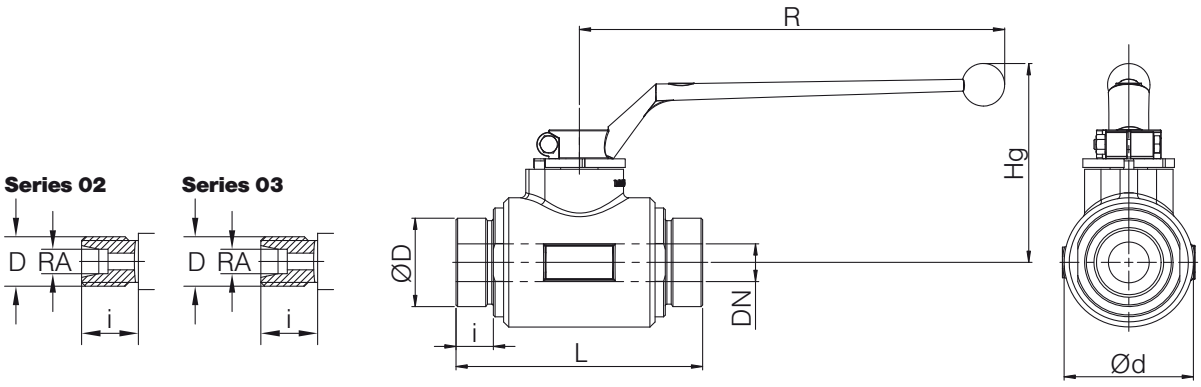

Series 02 (for non-soldering compression fittings with cutting ring DIN 2353, light-duty series)

DN mm	RA mm	PN bar	D	i mm	L mm	d mm	Hg mm	R mm	SW1 mm	Weight kg
32	35	40	M 45x2	16	145	Ø 76	117	250	17	3.5
40	42	40	M 52x2	16	150	Ø 90	121	250	17	4.1

Note! The pressure rating of the pipe unions can deviate from the nominal pressure rating of the ball valve.

Series 03 (for non-soldering compression fittings with cutting ring DIN 2353, heavy-duty series)

DN mm	RA mm	PN bar	D	i mm	L mm	d mm	Hg mm	R mm	SW1 mm	Weight kg
32	38	40	M 52x2	22	145*	Ø 76	117	250	17	3.5

*Deviating from the length V1, where necessary request special version in length V1.
Note! The pressure rating of the pipe unions can deviate from the nominal pressure rating of the ball valve.

Example of order: Ball valve type NSKA-D made of stainless steel, DN 32 with male thread for non-soldering compression fittings with cutting ring DIN 2353 – light-duty series
NSKA-D 32 02

Parts list NSKA-D

Pos.	Designation	Material*
10	Body	Stainless steel
20	Fitting	Stainless steel
30	Ball	Stainless steel
40	Seal	PTFE
50	Stop washer	Stainless steel
60	Stem	Stainless steel
80	O-ring	NBR, FPM
90	Hand lever	Zinc die-casting
100	O-ring	NBR, FPM
110	Bolt	
120	Washer	
130	Sliding ring	PTFE
140	Stop pin	Stainless steel

*Standard (can vary according to nominal width), other materials on request.
Due to the design, not all items are used for all nominal widths.

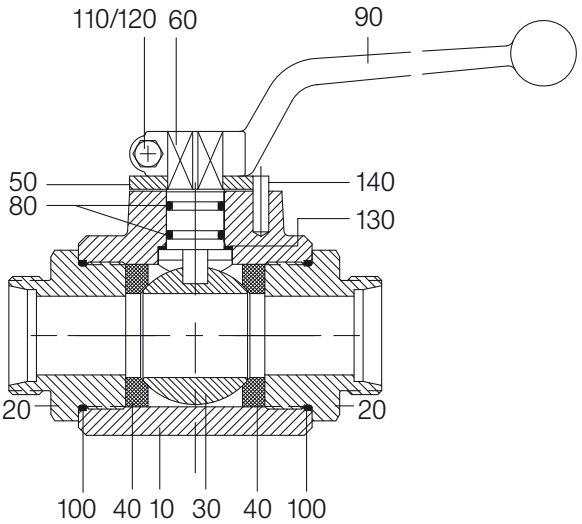

High-pressure ball valve HSKA-C, steel

With male thread

DN 6 - 40 **PN max. 500**

Series
02 – male thread on both sides for non-soldering compression fittings with cutting ring DIN 2353 – light-duty series
03 – male thread on both sides for non-soldering compression fittings with cutting ring DIN 2353 – heavy-duty series
05 – male thread on both sides flat sealing for pipe thread DIN EN ISO 228-1
44 – male thread on both sides flat sealing NPT ANSI/ASME B 1.20.1

Face-to-face lengths
DIN 3202 – 5 series V1

Temperature range
Standard: -10°C to +90°C
On request: -50°C to +250°C

Range of use
Liquids: Liquids group 1 and 2 according to PED 2014/68/EU Article 13
Gases: Liquids group 1 and 2 according to PED 2014/68/EU Article 13
As a matter of principle, the resistance to the flow medium must be ensured.

Technical specification
The HSKA-C type ball valve consists of a forged body with connector screwed in on one or both sides. The stem is blowout-proof. Up to nominal width DN 25, the stem is fitted from the outside by means of a fitting. Simple replacement of the stem seal is ensured by the fitting used. A stem seal in accordance with the German Technical Instructions on Air Quality Control (TA Luft) is available as standard from nominal width DN 32 and can be used, on request, up to nominal width DN 25 for an additional charge. Actuators can be attached, from nominal width DN 32, by means of an extension kit. This retrofit requirement is available as standard.

1.150 EN 08/17

Technical data HSKA-C

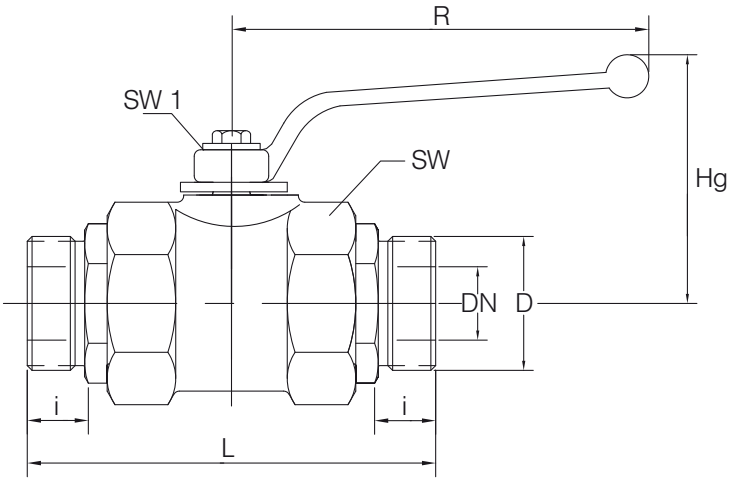

Series 02

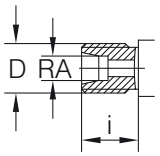

Series 03

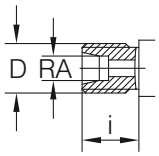

Series 05

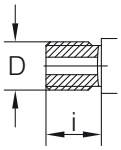

Series 44

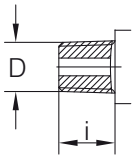

Series 02 (for non-soldering compression fittings with cutting ring DIN 2353, light-duty series)

DN mm	RA mm	PN bar	D	i mm	L mm	SW mm	Hg mm	R mm	SW1 mm	Weight kg
8	10	500	M 16x1.5	11	76	32	77	112	10	0.4
10	12	500	M 18x1.5	11	80	32	77	112	10	0.4
12	15	500	M 22x1.5	12	96	Ø 40	67	130	10	0.6
16	18	500	M 26x1.5	12	105	Ø 40	69	130	10	1.0
20	22	320	M 30x2	14	110	46	71	130	10	1.0
25	28	320	M 36x2	14	120	55	82	160	10	1.6
32	35	320 **	M 45x2	16	145	Ø 76	117	250	17	3.5
40	42	320 **	M 52x2	16	150	Ø 90	121	250	17	4.1

** On request, a light-duty version (pressure rating PN 160) with altered face-to-face length is also available.
Note! The pressure rating of the pipe unions can deviate from the nominal pressure rating of the ball valve.

Series 03 (for non-soldering compression fittings with cutting ring DIN 2353, heavy-duty series)

DN mm	RA mm	PN bar	D	i mm	L mm	SW mm	Hg mm	R mm	SW1 mm	Weight kg
8	12	500	M 20x1.5	12	76	32	77	112	10	0.4
10	14	500	M 22x1.5	14	80	32	77	112	10	0.4
12	16	500	M 24x1.5	14	96	Ø 40	67	130	10	0.6
16	20	500	M 30x2	16	105	Ø 40	69	130	10	1.0
20	25	320	M 36x2	18	110	46	71	130	10	1.0
25	30	320	M 42x2	20	132 *	55	82	160	10	1.6
32	38	320 **	M 52x2	22	145	Ø 76	117	250	17	3.5

* Deviating from the length V1, where necessary request special version in length V1.
** On request, a light-duty version (pressure rating PN 160) with altered face-to-face length is also available.
Note! The pressure rating of the pipe unions can deviate from the nominal pressure rating of the ball valve.

Series 05 (for flat sealing pipe union DIN EN ISO 228-1)

DN mm	PN bar	D	i mm	L mm	SW mm	Hg mm	R mm	SW1 mm	Weight kg
8	500	G3/8"	12	76	32	77	112	10	0.4
10	500	G1/2"	12	80	32	77	112	10	0.4
15	500	G3/4"	14	103*	Ø40	69	130	10	1.0
20	320	G1"	16	109*	46	71	130	10	1.0
25	320	G1 1/4"	18	128*	55	82	160	10	1.6

*Deviating from the length V1, where necessary request special version in length V1.

Series 44 (for flat sealing NPT - male thread ANSI/ASME B 1.20.1)

DN mm	PN bar	D	i mm	L mm	SW mm	Hg mm	R mm	SW1 mm	Weight kg
6	500	NPT 1/4"	14.5	84*	32	77	112	10	0.4
8	500	NPT 3/8"	14.5	84*	32	77	112	10	0.4
10	500	NPT 1/2"	19.0	93*	Ø40	67	130	10	0.6
15	500	NPT 3/4"	19.0	113*	Ø40	69	130	10	1.0
20	320	NPT 1"	24.0	125*	46	71	130	10	1.0
25	320	NPT 1 1/4"	24.5	141*	55	82	160	10	1.6

*Deviating from the length V1, where necessary request special version in length V1.

Example of order: Ball valve type HSKA-C made of steel, DN 12 with male thread for non-soldering compression fittings with cutting ring DIN 2353 – light-duty series
HSKA-C 12 02

Parts list HSKA-C

Pos.	Designation	Material*
10	Body	Steel
20	Fitting	Steel
30	Ball	11SMn30
40	Seal	POM
50	Stop washer	Steel
60	Stem	Steel
70	Fitting	Brass
80	O-ring	NBR
90	Hand lever	Zinc die-casting
100	O-ring	NBR
110	Bolt	
120	Washer	
130	O-ring	NBR
140	Stop pin	

*Standard (can vary according to nominal width), other materials on request.
Due to the design, not all items are used for all nominal widths.

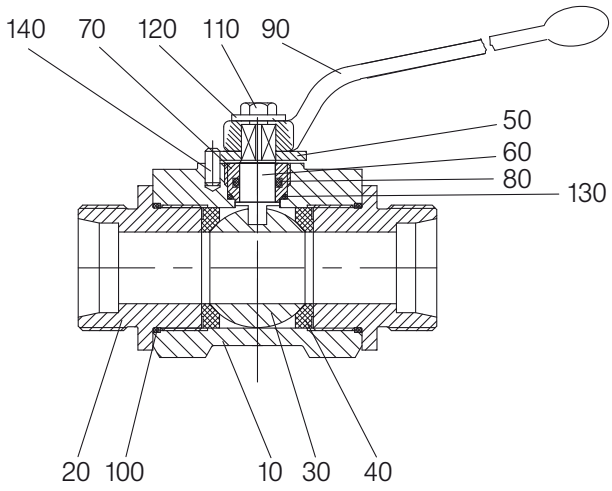

Please ask separately for requirements that exceed the standard conditions of use listed in this data sheet.
As a matter of principle, the safety information provided in the operating and servicing manual must be observed!
The operating and servicing manuals as well as the approval certificates can be downloaded at www.von-scheven.de.

We reserve the right to carry out technical modifications.

High-pressure ball valve HSKA-D, stainless steel

With male thread

DN 32 - 40 PN max. 320
Up to DN 25 please revert to type HBA-D.

Series
02 – male thread on both sides for non-soldering compression fittings with cutting ring DIN 2353 - light-duty series
03 – male thread on both sides for non-soldering compression fittings with cutting ring DIN 2353 – heavy-duty series

Face-to-face lengths
DIN 3202 – 5 series V1

Temperature range
Standard: -10°C to +90°C
On request: -50°C to +250°C

Range of use
Liquids: Liquids group 1 and 2 according to PED 2014/68/EU Article 13
Gases: Liquids group 1 and 2 according to PED 2014/68/EU Article 13
As a matter of principle, the resistance to the flow medium must be ensured.

Technical specification
The HSKA-D type ball valve consists of a forged body with connector screwed in on one or both sides. The stem is blowout-proof. A stem seal in accordance with the German Technical Instructions on Air Quality Control (TA Luft) is available as standard from nominal width DN 32. Actuators can be attached, from nominal width DN 32, by means of an extension kit. This retrofit requirement is available as standard.

Please ask separately for requirements that exceed the standard conditions of use listed in this data sheet.
As a matter of principle, the safety information provided in the operating and servicing manual must be observed!
The operating and servicing manuals as well as the approval certificates can be downloaded at www.von-scheven.de.

We reserve the right to carry out technical modifications.

1.160 EN 08/17

Technical data HSKA-D

Series 02

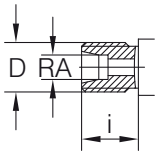

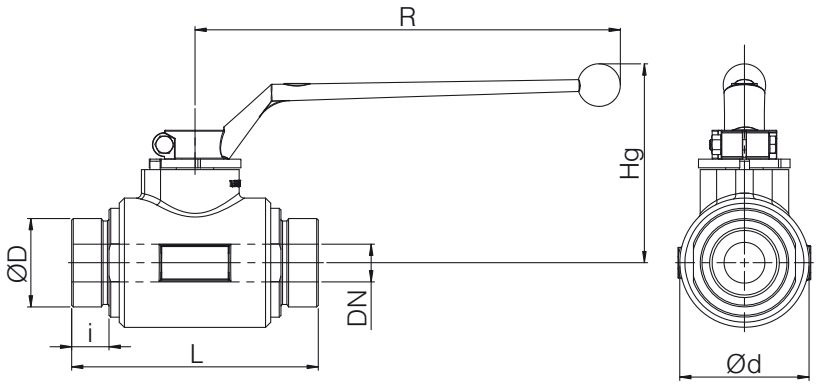

Series 02 (for non-soldering compression fittings with cutting ring DIN 2353, light-duty series)

DN mm	RA mm	PN bar	D	i mm	L mm	d mm	Hg mm	R mm	SW1 mm	Weight kg
32	35	320 **	M 45x2	16	145	Ø76	117	250	17	3.5
40	42	320 **	M 52x2	16	150	Ø90	121	250	17	4.1

** On request, a light-duty version (pressure rating PN 160) with altered face-to-face length is also available.
Note! The pressure rating of the pipe unions can deviate from the nominal pressure rating of the ball valve.

Series 03 (for non-soldering compression fittings with cutting ring DIN 2353, heavy-duty series)

DN mm	RA mm	PN bar	D	i mm	L mm	SW mm	Hg mm	R mm	SW1 mm	Weight kg
32	38	320 **	M 52x2	22	145	Ø 76	117	250	17	3.5

** On request, a light-duty version (pressure rating PN 160) with altered face-to-face length is also available.
Note! The pressure rating of the pipe unions can deviate from the nominal pressure rating of the ball valve.

Example of order: Ball valve type HSKA-D made of stainless steel, DN 32 with male thread for non-soldering compression fittings with cutting ring DIN 2353 – light-duty series
HSKA-D 32 02

Parts list HSKA-D

Pos.	Designation	Material*
10	Body	Stainless steel
20	Fitting	Stainless steel
30	Ball	Stainless steel
40	Seal	POM
50	Stop washer	Stainless steel
60	Stem	Stainless steel
80	O-ring	NBR
90	Hand lever	Zinc die-casting
100	O-ring	NBR
110	Bolt	
130	Sliding ring	PTFE
140	Stop pin	Stainless steel

*Standard (can vary according to nominal width), other materials on request.
Due to the design, not all items are used for all nominal widths.

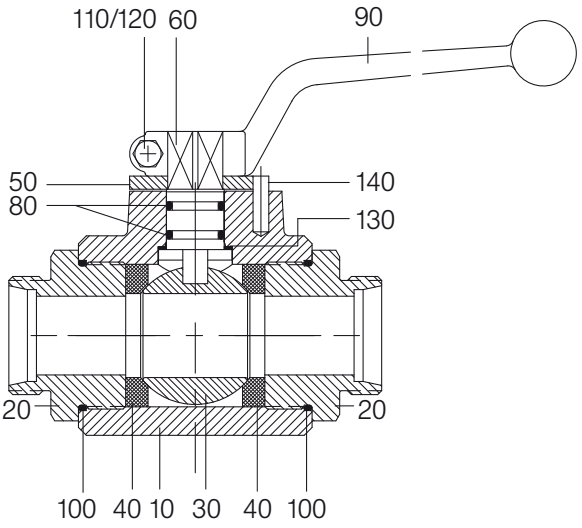

High-pressure ball valve SHK-C, steel

With female thread

DN 6 – 10 PN max. 800

Series 42 – NPT female thread ANSI/ASME B1.20.1
Other connectors on request

Temperature range Standard: -10°C to +60°C

Range of use Liquids: Liquids group 1 and 2 according to PED 2014/68/EU Article 13
Gases: Liquids group 1 and 2 according to PED 2014/68/EU Article 13
As a matter of principle, the resistance to the flow medium must be ensured.

Technical specification The SHK-C type ball valve consists of a block body with connector screwed in on both sides. The stem is fitted blowout-proof from the outside.
Actuators can be attached by means of an extension kit. This retrofit requirement must be specified when placing the order (additional charge).

Please ask separately for requirements that exceed the standard conditions of use listed in this data sheet.
As a matter of principle, the safety information provided in the operating and servicing manual must be observed!
The operating and servicing manuals as well as the approval certificates can be downloaded at www.von-scheven.de.

We reserve the right to carry out technical modifications.

1.165 EN 08/17

Technical data SHK-C

Series 42

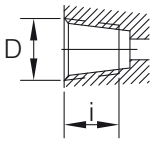

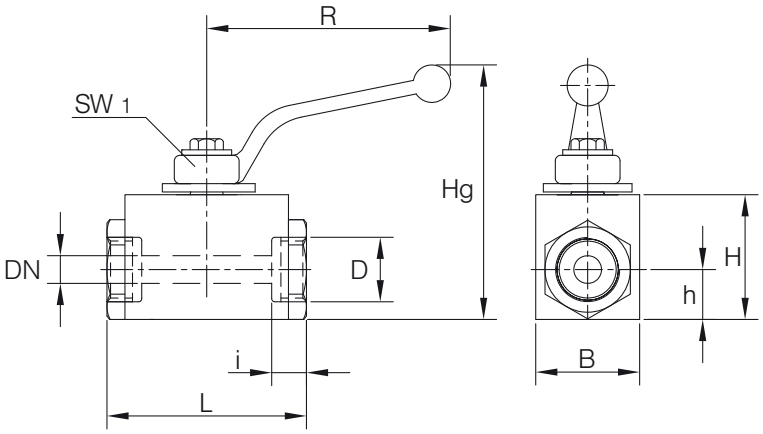

Series 42 (NPT female thread ANSI/ASME B 1.20.1))

DN mm	PN bar	D	i mm	L mm	B mm	H mm	h mm	Hg mm	R mm	SW1 mm	Weight kg
6	800	NPT 1/4"	12.5	60	45	45	21	92	160	10	0.8
10	800	NPT 3/8"	12.5	80	45	45	21	92	160	10	0.8

Example of order: Ball valve type SHK-C DN 10 made of steel with female thread ANSI/ASME B 1.20.1 (Series 42)
SHK-C 10 42

Parts list SHK-C

Pos.	Designation	Material*
10	Body	Steel
20	Fitting	Steel
30	Ball	Steel
40	Seal	POM
50	Stop washer	Steel
60	Stem	Steel
80	O-ring	NBR
90	Hand lever	Zinc die-casting
100	O-ring	NBR
110	Bolt	
120	Nut	
130	Sliding ring	PTFE
140	Stop pin	

*Standard (can vary according to nominal width), other materials on request.
Due to the design, not all items are used for all nominal widths.

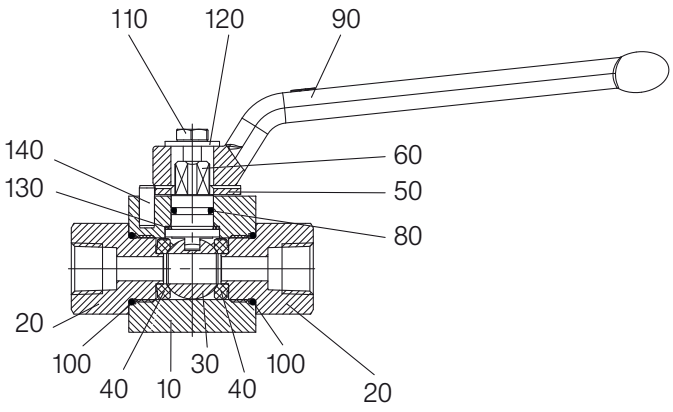

High-pressure ball valve EHK-D, stainless steel

With female thread

DN 8 - 20 **PN max. 2500**

Series 07 – female thread on both sides for HP fittings

Temperature range Standard: -20°C to +90°C

Range of use Liquids: Liquids group 1 and 2 according to PED 2014/68/EU Article 13
As a matter of principle, the resistance to the flow medium must be ensured.

Technical specification The EHK-D type ball valve consists of a round body with connector screwed in on both sides. The stem is fitted blowout-proof. The body and the fittings are provided with vent holes. Actuators can be attached by means of an extension kit. This retrofit requirement must be specified when placing the order (additional charge). The high standard of this high-pressure technology is renowned worldwide due to its reliability, ease of installation and user friendly features.

Only actuate when depressurized!

Options

Lockable

With pneumatic actuator

With pneumatic actuator and limit switch

With inductive limit switches

3-way changeover ball valve

Please ask separately for requirements that exceed the standard conditions of use listed in this data sheet.
As a matter of principle, the safety information provided in the operating and servicing manual must be observed!
The operating and servicing manuals as well as the approval certificates can be downloaded at www.von-scheven.de.

We reserve the right to carry out technical modifications.

1.170 EN 08/17

Technical data EHK-D

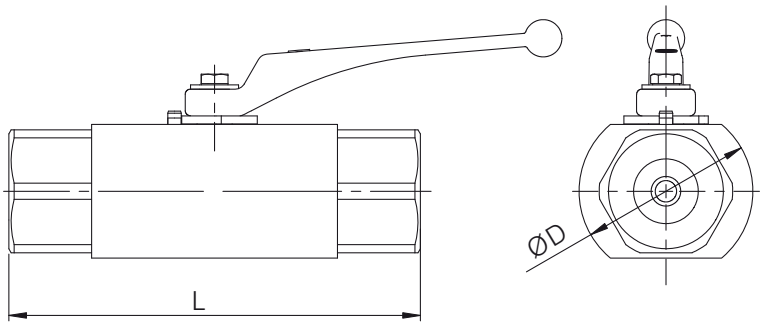

Series: 07

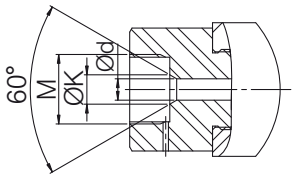

Mounting holes from below

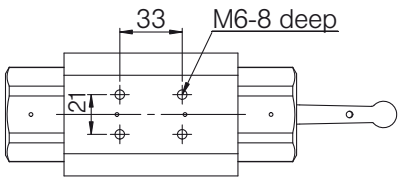

Series 07 (female thread on both sides for HP fittings)

DN mm	PN bar	M	K mm	d mm	L mm	D mm	Weight kg
8	2500	M 16x1.5	5	2.5	152	65	2.2
8	2500	M 20x1.5	7	3.0	148	65	2.5
			7	5.0			
8	2500	M 26x1.5	11	5.0	154	65	2.8
			11	8.0			
10	2500	M 30x2	16	10.0	162	65	3.0
14	2500	M 30x2	16	12.0	162	70	3.3
20	1000	G1 1/2"	28	20.0	172	75	4.0

Example of order: Ball valve type EHK DN 08 of made stainless steel with female thread M20 x 1.5 and clear span of 5 mm (series 07) **EHK 08 07** with details of the female thread M20 x 1.5 and d = 5

Parts list EHK-D

Designation	Material*
Body	Stainless steel
Fitting	Stainless steel
Ball	Stainless steel
Seal	PEEK
Stop washer	Stainless steel
Stem	Stainless steel
O-ring	NBR
Hand lever	Zinc die-casting
Supporting ring	POM
O-ring	NBR
Bearing ring	POM
Bolt	
Washer	
Bearing ring	
Stop pin	

*Standard (can vary according to nominal width), other materials on request.
Due to the design, not all items are used for all nominal widths.

Block ball valve for high-pressure acetylene SBAC-C, steel, TPED

With female and male thread

DN 6 / DN 10 PN 25

Series 03 – male thread on both sides for non-soldering compression fittings with cutting ring DIN 2353 – heavy-duty series
06 – female thread on both sides DIN ISO 228-1

Temperature range Permissible operating temperatures: -20°C to +65°C

Range of use Ball valve type SBAC-C in the nominal widths of DN 6 and DN 10 is approved for high-pressure acetylene PN 25 as a bundle / in-line valve according to the following standards and directives marked with π, followed by the identification number of the notifying authority: Directive 2010/35/EU about transportable pressure equipment (TPED) Type examination ADR 2013 conformity according to DIN EN ISO 10297:2006

Approvals Directive 2010/35/EU about transportable pressure equipment (TPED) Type examination ADR 2013 conformity according to DIN EN ISO 10297:2006

Technical specification Ball valve type SBAC-C is intended for throughflow and/or shutoff by means of 90° operation of the actuating element for the medium of acetylene with the pressure rating PN 25. The design consists of a block body with connector screwed in on both sides. The stem is fitted blowout-proof from the outside.

Option

Safety locking handle, engaging and lockable as an alternative to the hand lever.

1.190 EN 08/17

Technical data SBAC-C

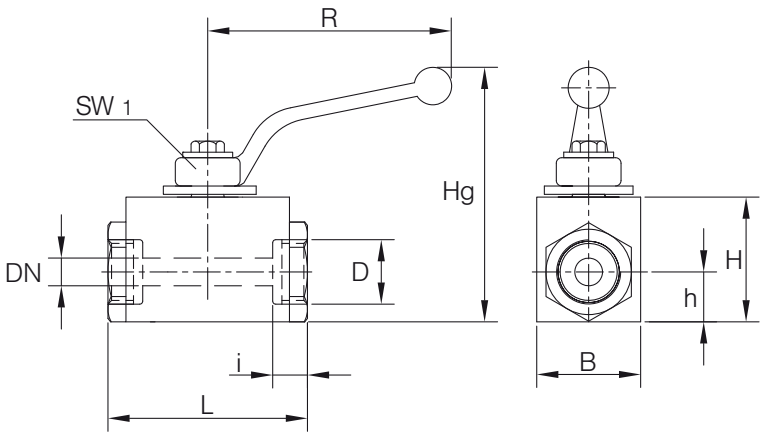

Series 03

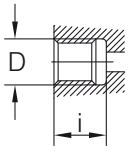

Series 06

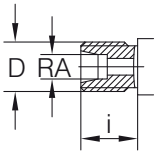

Series 03 (male thread on both sides for non-soldering compression fittings with cutting ring DIN 2353 – heavy-duty series)

Type	DN mm	PN bar	D/RA	i mm	L mm	B mm	H mm	h mm	Hg mm	R mm	SW1 mm	Weight kg
SBAC–C 1303	10	25	M 24x1.5/RA16–S	14	102	35	45	18	85	130	10	1.0
SBAC–C 1303–LH	10	25	M 24x1.5/RA 16–S	14	103	35	45	18	–	–	–	0.9
			M 28x1.5 LH/RA 16–S	18	103	35	45	18	–	–	–	0.9

Series 06 (female thread on both sides DIN ISO 228 - 1)

Type	DN mm	PN bar	D	i mm	L mm	B mm	H mm	h mm	Hg mm	R mm	SW1 mm	Weight kg
SBAC–C 1006	6	25	G3/8"	12.5	80	30	40	15	92	112	10	0.5
SBAC–C 1306	10	25	G1/2"	14.5	100	35	45	18	85	130	10	1.0

Please ask separately for requirements that exceed the standard conditions of use listed in this data sheet.
As a matter of principle, the safety information provided in the operating and servicing manual must be observed!
The operating and servicing manuals as well as the approval certificates can be downloaded at www.von-scheven.de.

We reserve the right to carry out technical modifications.

Block ball valve for high-pressure acetylene NBAC-C, steel

With female thread

DN 6 / DN 10 PN 25

Series 06 – female thread on both sides DIN ISO 228-1

Identification plate According to DIN EN ISO 15615:2002, test report BAM II-578/2010

Temperature range Permissible operating temperatures: -20°C to +65°C

Range of use Ball valve type NBAC-C in nominal widths DN 6 and DN 10 is tested for high-pressure acetylene PN 25 as a shutoff valve and manually actuated quick-closing facility according to DIN EN ISO 15615:2002 and tested by the BAM; test report BAM II-578/2010.

Technical specification Ball valve type NBAC-C is intended for throughflow and/or shutoff by means of 90° operation of the actuating element for the medium of acetylene with the pressure rating PN 25. The design consists of a block body with connector screwed in on both sides. The stem is fitted blowout-proof from the outside.

Option

Safety locking hanlde, engaging and lockable as an alternative to the hand lever.

1.200 EN 08/17

Technical data NBAC-C

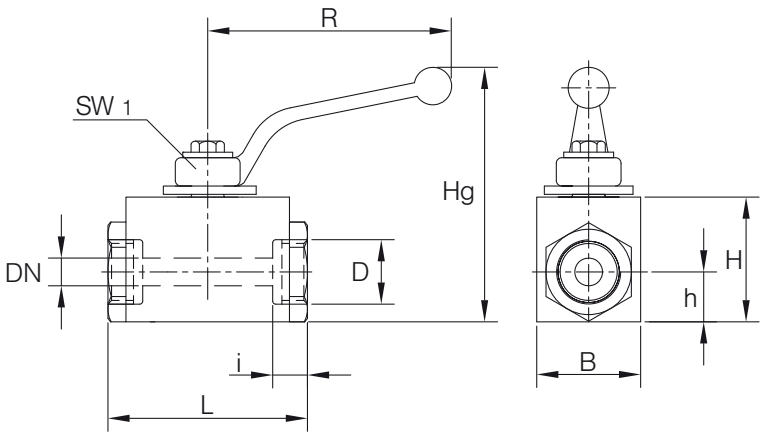

Series 06

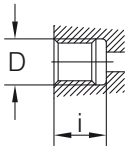

Series 06 (female thread on both sides according to ISO 228 - 1)

Type	DN mm	PN bar	D	i mm	L mm	B mm	H mm	h mm	Hg mm	R mm	SW1 mm	Weight kg
NBAC–C 1006	6	25	G 3/8"	12.5	80	30	40	15	92	112	10	0.5
NBAC–C 1306	10	25	G 1/2"	14.5	100	35	45	18	85	130	10	1.0

Please ask separately for requirements that exceed the standard conditions of use listed in this data sheet.
As a matter of principle, the safety information provided in the operating and servicing manual must be observed!
The operating and servicing manuals as well as the approval certificates can be downloaded at www.von-scheven.de.

We reserve the right to carry out technical modifications.

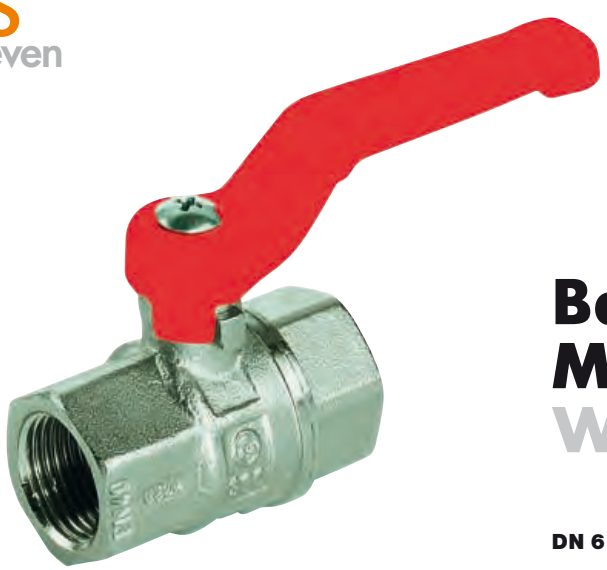

Ball valve MSK, Brass

With female thread

DN 6 - 80 PN max. 40

Series 06 – female thread on both sides DIN ISO 7-1

Temperature range Permissible operating temperature: -10°C to +150°C
Other temperatures on request .

Range of use For non-corrosive liquids and gases
In addition, as a matter of principle, the resistance to the flow medium must be ensured.

Materials

Housing:	Brass nickel-plated
Ball:	Brass hard-chromium-plated
Stem:	Brass hard-chromium-plated
Ball seals:	PTFE
Stem seal:	PTFE

Technical specification Brass ball valve type MSK is suitable for numerous technical applications with a maximum operating pressure of 40 bar. The range of applications is restricted, in particular, by the materials used.

1-210 EN 08/17

Technical data MSK

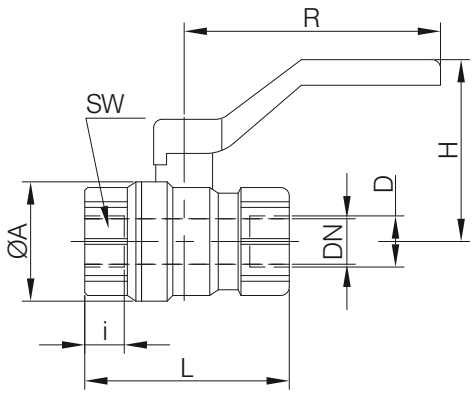

Series 06 (female thread on both sides ISO 7-1)

DN	Clear width	PN	D	L	A	i	R	SW	H	Weight
mm	mm	bar		mm	mm	mm	mm	mm	mm	kg
6	9	40	1/4"	46	22.5	12.3	83	6-hexagonal-19	42	0.20
10	11	40	3/8"	48	26.0	12.0	83	6-hexagonal-22	43	0.20
15	15	40	1/2"	58	21.5	15.0	83	6-hexagonal-26	46	0.25
20	20	40	3/4"	69	40.0	17.0	83	6-hexagonal-28	49	0.35
25	25	40	1"	82	48.0	20.0	90	6-hexagonal-39	66	0.55
32	32	40	1 1/4"	97	59.0	23.0	110	6-hexagonal-49	68	0.90
40	40	40	1 1/2"	107	71.0	23.0	130	6-hexagonal-56	81	1.25
50	50	40	2“	131	87.0	28.0	190	6-hexagonal-68	110	1.90
65	63	40	2 1/2"	155	110.0	32.5	240	4-square-87	132	3.30
80	76	40	3"	178	127.0	35.5	240	4-square-100	141	4.60

Example of order: Ball valve type MSK DN 15 with female thread ISO 7-1
MSK 15 06

Please ask separately for requirements that exceed the standard conditions of use listed in this data sheet.
As a matter of principle, the safety information provided in the operating and servicing manual must be observed!
The operating and servicing manuals as well as the approval certificates can be downloaded at www.von-scheven.de.

We reserve the right to carry out technical modifications.

Ball valve for gas MSG, Brass

With female thread

DN 10 - 50 PN max. 5

Series 06 – female thread on both sides according to ISO 7-1

Temperature range Permissible operating temperature: -20°C to +60°C

Range of use For non-corrosive liquids and gases
In addition, as a matter of principle, the resistance to the flow medium must be ensured

Approvals DVGW for gas, pressure rating PN 5

Materials

Housing:	Brass nickel-plated
Ball:	Brass hard-chromium-plated
Stem:	Brass hard-chromium-plated
Ball seals:	PTFE
Stem seal:	NBR/FPM

Technical specification Brass ball valve type MSG is suitable for numerous technical applications with a maximum operating pressure of 40 bar as well as for the operation of flammable gases at a maximum operating pressure of 5 bar. The range of applications is defined, in particular, by the materials used. The stem seal is designed with a maintenance-free O-ring seal.

1.220 EN 08/17

Technical data MSG

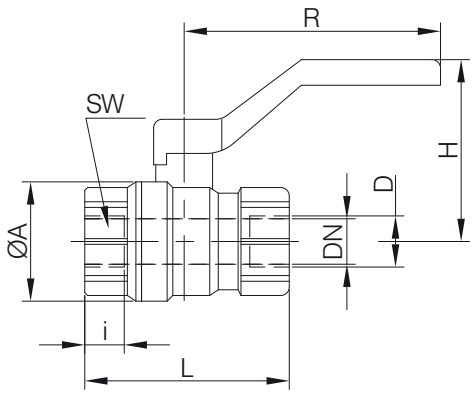

Series 06 (female thread on both sides ISO 7-1)

DN mm	Clear width mm	PN bar	D	L mm	R mm	H mm	Weight kg
10	11	5	3/8"	48	83	43	0.20
15	15	5	1/2"	58	83	43	0.25
20	20	5	3/4"	70	83	47	0.35
25	25	5	1"	83	90	64	0.55
32	32	5	1 1/4"	97	110	69	0.90
40	40	5	1 1/2"	106	130	79	1.25
50	50	5	2"	131	190	110	1.90

Example of order: Ball valve type MSG DN 15 with female thread ISO 7-1
MSG 15 06

Please ask separately for requirements that exceed the standard conditions of use listed in this data sheet.
As a matter of principle, the safety information provided in the operating and servicing manual must be observed!
The operating and servicing manuals as well as the approval certificates can be downloaded at www.von-scheven.de.

We reserve the right to carry out technical modifications.

Ball valve
ESK, stainless steel
With female thread

DN 8 - 100 PN 63

Series 06 – female thread on both sides according to ISO 7-1
DIN EN ISO 228-1, DIN EN ISO 10226-1

Temperature range Permissible operating temperature: -10°C to +200°C

Materials

Housing:	1.4408
Ball:	1.4408
Stem:	1.4404
Ball seals:	PTFE
Stem seal:	PTFE

Technical specification The 2-part stainless steel ball valve type ESK is suitable for numerous technical applications with a maximum operating pressure of up to 63 bar. The stem seal is ensured by a packing seal.

1-230 EN 08/17

Technical data ESK

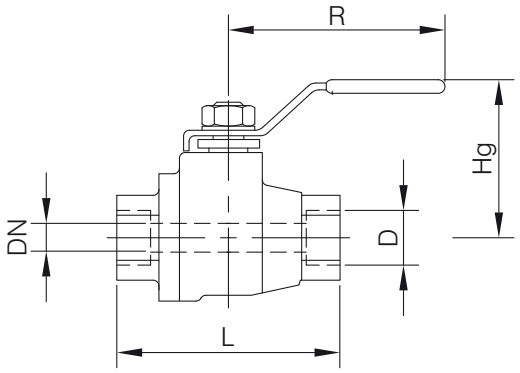

Series 06 (female thread on both sides DIN EN ISO 228-1)

DN mm	PN bar	Clear width mm	D	L mm	R mm	Hg mm	Weight kg
8	63	11.6	1/4"	55	100	50	0.26
10	63	12.5	3/8"	60	100	50	0.28
15	63	16.0	1/2"	75	100	50	0.30
20	63	20.0	3/4"	80	125	60	0.55
25	63	25.0	1"	90	160	70	0.84
32	63	32.0	1 1/4"	110	160	80	1.26
40	63	38.0	1 1/2"	120	190	90	2.00
50	63	50.0	2"	140	190	90	3.13
65	63	65.0	2 1/2"	185	250	145	6.00
80	63	80.0	3"	205	250	145	10.00
100	63	100.0	4"	240	320	175	20.70

Example of order: Ball valve type ESK DN 15 with female thread DIN EN ISO 228-1
ESK 15 06

Please ask separately for requirements that exceed the standard conditions of use listed in this data sheet.
As a matter of principle, the safety information provided in the operating and servicing manual must be observed!
The operating and servicing manuals as well as the approval certificates can be downloaded at www.von-scheven.de.

We reserve the right to carry out technical modifications.

For example:

Offshore

In their understandable enthusiasm for renewable energy, people often forget that crude oil remains the most important commodity currently driving the economies of industrialised nations around the world. Without it, everything would literally grind to a halt. Around 25 % of so-called proven reserves can be found off mainland coasts, and one-quarter of the 18 billion litres of crude oil consumed each day is produced offshore. This is the stamping ground of oil rigs, where working conditions are harsh and the equipment deployed is among the most sophisticated you will find worldwide. The route taken by this crude oil via pipelines from the borehole to shoreside facilities or tankers is determined by strict environmental regulations. Our ball valves meet the requirements.

Flange ball valve KFK-B, ductile cast iron, short face-to-face length

With DIN flange

DN 32 - 250 PN max. 16

Series 25 – PN 10 according to DIN EN 1092-1
26 – PN 16 according to DIN EN 1092-1

Face-to-face lengths DIN EN 558 FTF basic series 27 (formerly: DIN 3202-1 Series F4)

Temperature range Standard: -10°C to +150°C, DVGW -20°C to +60°C
On request: -20°C to +250°C

Range of use Liquids: Liquids group 1 and 2 according to PED 2014/68/EU Article 13
Gases: Liquids group 1 and 2 according to PED 2014/68/EU Article 13
As a matter of principle, the resistance to the flow medium must be ensured.

Approvals Series 26: DVGW for gas PN 16
TÜV-Component mark
HTB (DN 32-150, MOP 5)
Technical instructions on air quality control (TA Luft)

Technical specification The KFK-B type ball valve consists of a 2-part body. Up to nominal width DN 100, the flange is screwed into the body. From nominal width DN 125, the two body parts are flanged together. The stem is blowout-proof with a two-fold O-ring seal. It is possible to attach the actuators via the standard ISO flanged connection.

2.010 EN 08/17

Technical data KFK-B

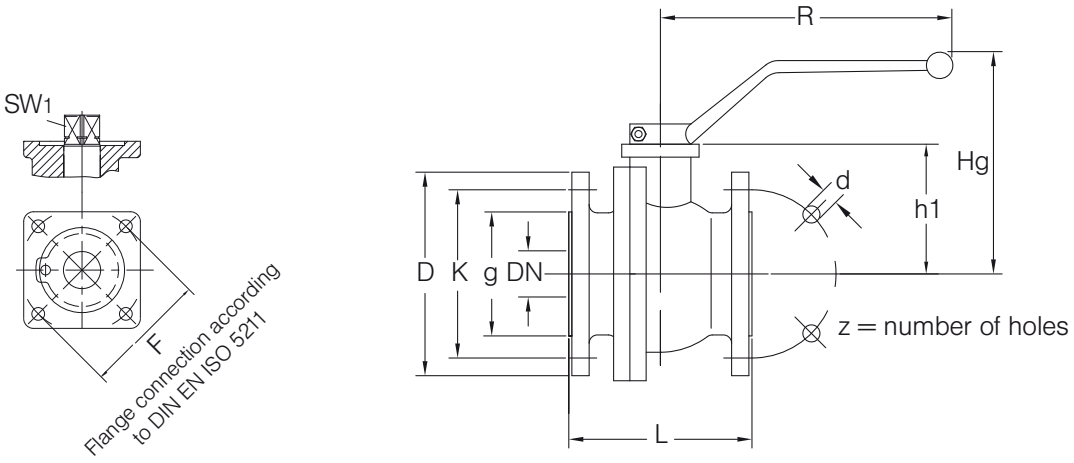

Series 25 (PN 10 according to DIN EN 1092-1)

DN mm	PN bar	L mm	D mm	g mm	K mm	z	d mm	Hg mm	R mm	h1 mm	F DIN EN ISO 5211	SW1 mm	Weight kg
32	10	130	140	78	100	4	18	117	250	60	F07	17	5.8
40	10	140	150	88	110	4	18	121	250	64	F07	17	7.0
50	10	150	165	102	125	4	18	128	250	71	F07	17	9.3
65	10	170	185	122	145	4	18	158	250	101	F07	17	14.5
80	10	180	200	138	160	8	18	182	370	131	F10	22	18.5
100	10	190	220	158	180	8	18	194	370	144	F10	22	24.0
125	10	325	250	188	210	8	18	195	520	163	F10	22	47.5
150	10	350	285	212	240	8	22	225	700	194	F12	27	67.0
200	10	400	340	268	295	8	22	260	700	231	F12	27	92.0
250*	10	450	395	320	350	12	22	260	700	231	F12	27	89.0

*Reduced bore, clear span 200.

Series 26 (PN 16 according to DIN EN 1092-1)

DN mm	PN bar	L mm	D mm	g mm	K mm	z	d mm	Hg mm	R mm	h1 mm	F DIN EN ISO 5211	SW1 mm	Weight kg
32	16	130	140	78	100	4	18	117	250	60	F07	17	5.8
40	16	140	150	88	110	4	18	121	250	64	F07	17	7.0
50	16	150	165	102	125	4	18	128	250	71	F07	17	9.3
65	16	170	185	122	145	4	18	158	250	101	F07	17	14.5
80	16	180	200	138	160	8	18	182	370	131	F10	22	18.5
100	16	190	220	158	180	8	18	194	370	144	F10	22	24.0
125	16	325	250	188	210	8	18	195	520	163	F10	22	47.5
150	16	350	285	212	240	8	22	225	700	194	F12	27	67.0
200	16	400	340	268	295	12	22	260	700	231	F12	27	92.0
250*	16	450	405	320	355	12	26	260	700	231	F12	27	89.0

*Reduced bore, clear span 200.

Example of order: Ball valve type KFK-B DN 100 with flanged connection
PN 16 according to DIN EN 1092-1 (Series 26)
KFK-B 100 26

Parts list KFK-B

Pos.	Designation	Material*
10	Body	Casting
20	Flange	Casting
30	Ball	Brass, steel, casting
40	Seal	PTFE
50	Stop washer	Steel
60	Stem	Brass, steel
80	O-ring	FPM
90	Hand lever	Zinc die casting, casting
100	O-ring	FPM
110	Bolt	
120	Nut, washer	
130	O-ring	FPM
	Sliding ring	PTFE
140	Stop pin	
160	Bolt	

*Standard (can vary according to nominal width), other materials on request.
Due to the design, not all items are used for all nominal widths.

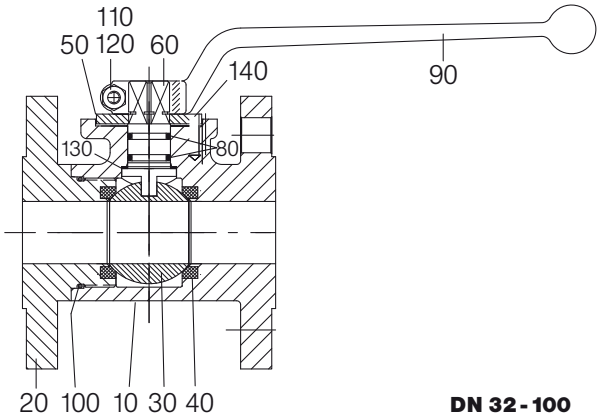

DN 32 - 100

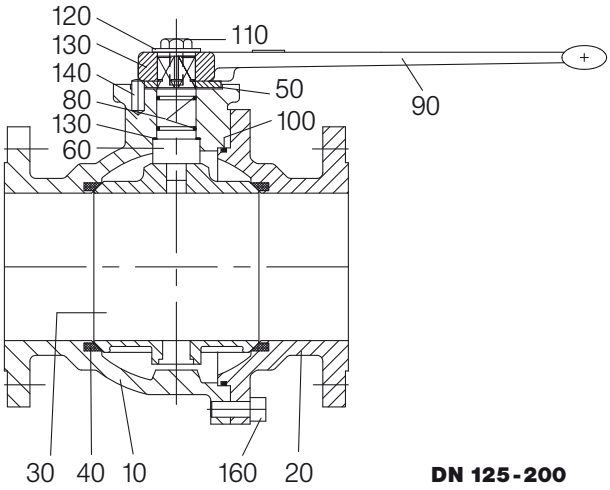

DN 125 - 200

Please ask separately, where requirements exceed the standard conditions of use listed in this data sheet.
As a matter of principle, the operating and maintenance instructions, in particular the safety instructions must be observed!
Operating and maintenance instructions as well as the approval certificates can be downloaded at www.von-scheven.de.

We reserve the right to carry out technical modifications.

Flange ball valve KFK-C, steel, short face-to-face length

With DIN flange

DN 10 - 250 **PN max. 40**

Series 25 – PN 10 according to DIN EN 1092-1
26 – PN 16 according to DIN EN 1092-1
27 – PN 25 according to DIN EN 1092-1
28 – PN 40 according to DIN EN 1092-1

Face-to-face lengths DIN EN 558 FTF basic series 27 (formerly: DIN 3202-1 Series F4)

Temperature range Standard: -10°C to +150°C; DVGW -20°C to +60°C
On request: -50°C to +250°C

Range of use Liquids: Liquids group 1 and 2 according to PED 2014/68/EU Article 13
Gases: Liquids group 1 and 2 according to PED 2014/68/EU Article 13
As a matter of principle, the resistance to the flow medium must be ensured.

Approvals Series 26, 28: DVGW for gas
Series 27: DVGW for gas (up to DN 150)
TÜV-Component mark
Technical instructions on air quality control (TA Luft)

Technical specification The KFK-C type ball valve consists of a 3-part body, from DN 50 of a 2-part body. Up to nominal width DN 50, the flange is screwed into the body. From nominal width DN 65, the two body parts are flanged together. The stem is blowout-proof and, from nominal width DN 32 is provided with a two-fold O-ring seal.
Ball valves with DVGW approval PN 40 are equipped with a manual gear from DN 150 forth.

2.020 EN 08/17

Technical data KFK-C

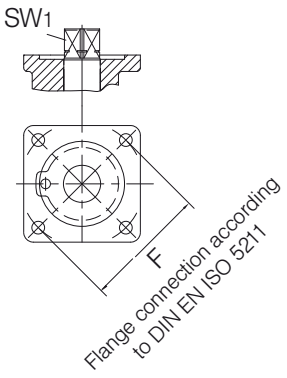

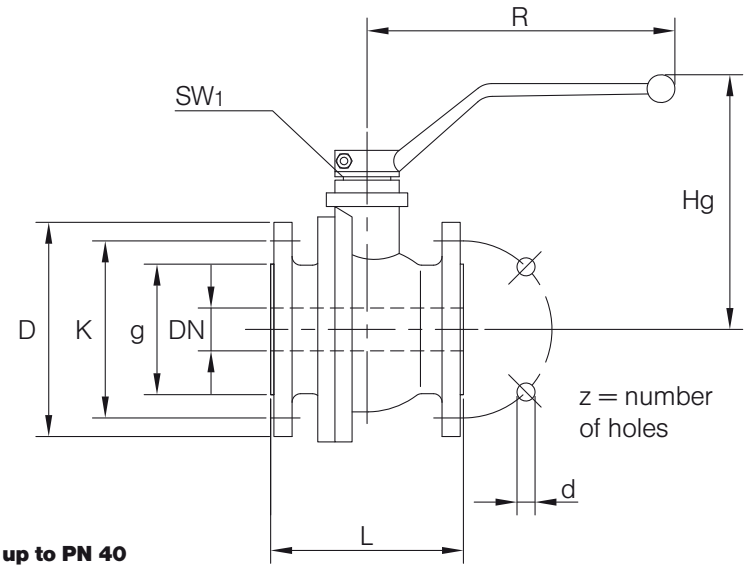

Flanged ball valves up to DN 50 and up to PN 40 are supplied with swiveling flanges by default.

Series 25 (PN 10 according to DIN EN 1092-1)

DN mm	PN bar	L mm	D mm	g mm	K mm	z	d mm	Hg mm	R mm	F DIN EN ISO 5211	SW1 mm	Weight kg
10	10	110	90	40	60	4	14	77	112		10	1.7
15	10	115	95	45	65	4	14	69	130		10	2.4
20	10	120	105	58	75	4	14	71	160		10	3.3
25	10	125	115	68	85	4	14	82	160		10	4.5
32	10	130	140	78	100	4	18	117	250		17	6.7
40	10	140	150	88	110	4	18	121	250		17	8.0
50	10	150	165	102	125	4	18	128	250	F07	17	10.0
65	10	170	185	122	145	4	18	158	250		17	19.0
80	10	180	200	138	160	8	18	182	370	F10	22	25.0
100	10	190	220	158	180	8	18	194	370	F10	22	30.0
125	10	325	250	188	210	8	18	195	520	F10	22	50.0
150	10	350	285	212	240	8	22	225	700	F12	27	72.0
200	10	400	340	268	295	8	22	260	700	F12	27	108.0
250*	10	450	395	320	350	12	22	260	700	F12	27	135.0

*Reduced bore, clear span 200.

Series 26 (PN 16 according to DIN EN 1092-1)

DN mm	PN bar	L mm	D mm	g mm	K mm	z	d mm	Hg mm	R mm	F DIN EN ISO 5211	SW1 mm	Weight kg
10	16	110	90	40	60	4	14	77	112		10	1.7
15	16	115	95	45	65	4	14	69	130		10	2.4
20	16	120	105	58	75	4	14	71	160		10	3.3
25	16	125	115	68	85	4	14	82	160		10	4.5
32	16	130	140	78	100	4	18	117	250		17	6.7
40	16	140	150	88	110	4	18	121	250		17	8.0
50	16	150	165	102	125	4	18	128	250	F07	17	10.0
65	16	170	185	122	145	4	18	158	250		17	19.0
80	16	180	200	138	160	8	18	182	370	F10	22	25.0
100	16	190	220	158	180	8	18	194	370	F10	22	30.0
125	16	325	250	188	210	8	18	195	520	F10	22	50.0
150	16	350	285	212	240	8	22	225	700	F12	27	72.0
200	16	400	340	268	295	12	22	260	700	F12	27	108.0
250*	16	450	405	320	355	12	22	260	700	F12	27	135.0

*Reduced bore, clear span 200.

Series 27 (PN 25 according to DIN EN 1092-1)

DN mm	PN bar	L mm	D mm	g mm	K mm	z	d mm	Hg mm	R mm	F DIN EN ISO 5211	SW1 mm	Weight kg
10	25	110	90	40	60	4	14	77	112		10	1.7
15	25	115	95	45	65	4	14	69	130		10	2.4
20	25	120	105	58	75	4	14	71	160		10	3.3
25	25	125	115	68	85	4	14	82	160		10	4.5
32	25	130	140	78	100	4	18	117	250		17	6.7
40	25	140	150	88	110	4	18	121	250		17	8.0
50	25	150	165	102	125	4	18	128	250	F07	17	10.0
65	25	170	185	122	145	8	18	158	250		17	19.0
80	25	180	200	138	160	8	18	182	370	F10	22	25.0
100	25	190	235	162	190	8	22	194	370	F10	22	30.0
125	25	325	270	188	220	8	26	195	520	F10	22	50.0
150	25	350	300	218	250	8	26	225	700	F12	27	72.0
200	25	400	360	278	310	12	26	260	700	F12	27	108.0
250*	25	450	425	335	370	12	30	260	700	F12	27	135.0

*Reduced bore, clear span 200.

Series 28 (PN 40 according to DIN EN 1092-1)

DN mm	PN bar	L mm	D mm	g mm	K mm	z	d mm	Hg mm	R mm	F DIN EN ISO 5211	SW1 mm	Weight kg
10	40	110	90	40	60	4	14	77	112		10	1.7
15	40	115	95	45	65	4	14	69	130		10	2.4
20	40	120	105	58	75	4	14	71	160		10	3.3
25	40	125	115	68	85	4	14	82	160		10	4.5
32	40	130	140	78	100	4	18	117	250		17	6.7
40	40	140	150	88	110	4	18	121	250		17	8.0
50	40	150	165	102	125	4	18	128	250	F07	17	10.0
65	40	170	185	122	145	8	18	158	250		17	19.0
80	40	180	200	138	160	8	18	182	370	F10	22	25.0
100	40	190	235	162	190	8	22	194	370	F10	22	30.0
125	40	325	270	188	220	8	26	195	520	F10	22	50.0
150	40	350	300	218	250	8	26	225	700	F12	27	72.0
200	40	400	375	285	320	12	30	260	700	F12	27	108.0
250*	40	450	450	345	385	12	38	260	700	F12	27	135.0

*Reduced bore, clear span 200.

Example of order: Ball valve type KFK-C DN 100 with flanged connection PN 16 according to DIN EN 1092-1
KFK-C 100 26

Parts list KFK-C

Pos.	Designation	Material
10	Body	Forged steel, steel casting
20	Flange	Steel, steel casting
30	Ball	Brass, steel, grey cast iron
40	Seal	PTFE
50	Stop washer	Steel
60	Stem	Brass, steel
70	Fitting	Brass
80	O-ring	NBR, FPM
90	Hand lever	Zinc die casting, casting
100	O-ring	NBR, FPM
110	Bolt	
120	Nut	
	Washer	
130	O-ring	NBR, FPM
	Sliding ring	PTFE
140	Stop pin	
160	Bolt	
180	Pin	Steel
190	Bearing shell	
200	O-ring	NBR, FPM

*Standard (can vary according to nominal width), other materials on request.
Due to the design, not all items are used for all nominal widths.

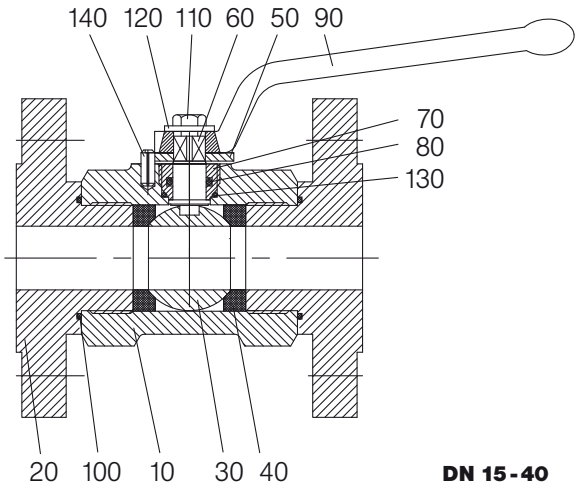

DN 15-40

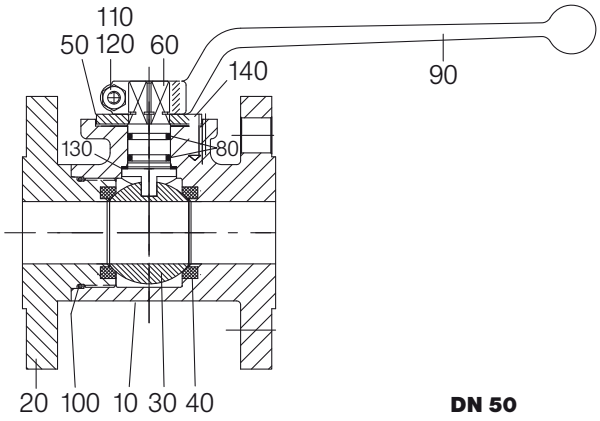

DN 50

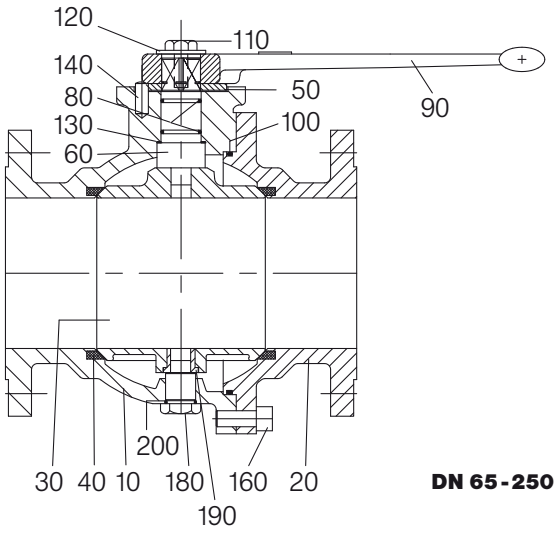

DN 65-250

Please ask separately, where requirements exceed the standard conditions of use listed in this data sheet.
As a matter of principle, the operating and maintenance instructions, in particular the safety instructions must be observed!
Operating and maintenance instructions as well as the approval certificates can be downloaded at www.von-scheven.de.

We reserve the right to carry out technical modifications.

Flange ball valve KFK-D, stainless steel, short face-to-face length

With DIN flange

DN 10 - 250 **PN max. 40**

Series 25 – PN 10 according to DIN EN 1092-1
26 – PN 16 according to DIN EN 1092-1
27 – PN 25 according to DIN EN 1092-1
28 – PN 40 according to DIN EN 1092-1

Face-to-face lengths DIN EN 558 FTF basic series 27 (formerly: DIN 3202-1 Series F4)

Temperature range Standard: -10°C to +150°C; DVGW -20°C to +60°C
On request: -50°C to +250°C

Range of use Liquids: Liquids group 1 and 2 according to PED 2014/68/EU Article 13
Gases: Liquids group 1 and 2 according to PED 2014/68/EU Article 13
As a matter of principle, the resistance to the flow medium must be ensured.

Approvals Series 26, 27, 28: DVGW for gas (up to DN 100)
TÜV-Component mark
Technical instructions on air quality control (TA Luft)

Technical specification The KFK-D type ball valve consists of a 3-part body, from DN 50 of a 2-part body. Up to nominal width DN 50, the flange is screwed into the body. From nominal width DN 65, the two body parts are flanged together. The stem is blowout-proof and, from nominal width DN 32 is provided with a two-fold O-ring seal.

2.030 EN 08/17

Technical data KFK-D

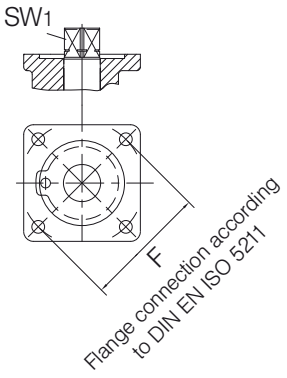

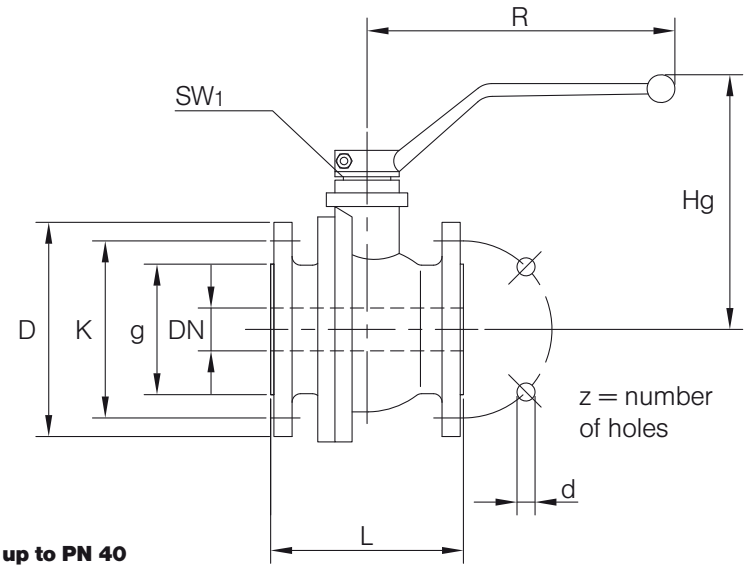

Flanged ball valves up to DN 50 and up to PN 40 are supplied with swiveling flanges by default.

Series 25 (PN 10 according to DIN EN 1092-1)

DN mm	PN bar	L mm	D mm	g mm	K mm	z	d mm	Hg mm	R mm	F DIN EN ISO 5211	SW1 mm	Weight kg
10	10	110	90	40	60	4	14	77	112		10	1.7
15	10	115	95	45	65	4	14	69	130		10	2.7
20	10	120	105	58	75	4	14	71	160		10	3.8
25	10	125	115	68	85	4	14	82	160		10	5.0
32	10	130	140	78	100	4	18	117	250		17	6.7
40	10	140	150	88	110	4	18	121	250		17	8.0
50	10	150	165	102	125	4	18	128	250	F07	17	10.0
65	10	170	185	122	145	4	18	158	250		17	19.0
80	10	180	200	138	160	8	18	182	370	F10	22	25.0
100	10	190	220	158	180	8	18	194	370	F10	22	30.0
125	10	325	250	188	210	8	18	195	520	F10	22	50.0
150	10	350	285	212	240	8	22	225	700	F12	27	72.0
200	10	400	340	268	295	8	22	260	700	F12	27	108.0
250*	10	450	395	320	350	12	22	260	700	F12	27	135.0

*Reduced bore, clear span 200.

Series 26 (PN 16 according to DIN EN 1092-1)

DN mm	PN bar	L mm	D mm	g mm	K mm	z	d mm	Hg mm	R mm	F DIN EN ISO 5211	SW1 mm	Weight kg
10	16	110	90	40	60	4	14	77	112		10	1.7
15	16	115	95	45	65	4	14	69	130		10	2.7
20	16	120	105	58	75	4	14	71	160		10	3.8
25	16	125	115	68	85	4	14	82	160		10	5.0
32	16	130	140	78	100	4	18	117	250		17	6.7
40	16	140	150	88	110	4	18	121	250		17	8.0
50	16	150	165	102	125	4	18	128	250	F07	17	10.0
65	16	170	185	122	145	4	18	158	250		17	19.0
80	16	180	200	138	160	8	18	182	370	F10	22	25.0
100	16	190	220	158	180	8	18	194	370	F10	22	30.0
125	16	325	250	188	210	8	18	195	520	F10	22	50.0
150	16	350	285	212	240	8	22	225	700	F12	27	72.0
200	16	400	340	268	295	12	22	260	700	F12	27	108.0
250*	16	450	405	320	355	12	22	260	700	F12	27	135.0

*Reduced bore, clear span 200.

Series 27 (PN 25 according to DIN EN 1092-1)

DN mm	PN bar	L mm	D mm	g mm	K mm	z	d mm	Hg mm	R mm	F DIN EN ISO 5211	SW1 mm	Weight kg
10	25	110	90	40	60	4	14	77	112		10	1.7
15	25	115	95	45	65	4	14	69	130		10	2.7
20	25	120	105	58	75	4	14	71	160		10	3.8
25	25	125	115	68	85	4	14	82	160		10	5.0
32	25	130	140	78	100	4	18	117	250		17	6.7
40	25	140	150	88	110	4	18	121	250		17	8.0
50	25	150	165	102	125	4	18	128	250	F07	17	10.0
65	25	170	185	122	145	8	18	158	250		17	19.0
80	25	180	200	138	160	8	18	182	370	F10	22	25.0
100	25	190	235	162	190	8	22	194	370	F10	22	30.0
125	25	325	270	188	220	8	26	195	520	F10	22	50.0
150	25	350	300	218	250	8	26	225	700	F12	27	72.0
200	25	400	360	278	310	12	26	260	700	F12	27	108.0
250*	25	450	425	335	370	12	30	260	700	F12	27	135.0

*Reduced bore, clear span 200.

Series 28 (PN 40 according to DIN EN 1092-1)

DN mm	PN bar	L mm	D mm	g mm	K mm	z	d mm	Hg mm	R mm	F DIN EN ISO 5211	SW1 mm	Weight kg
10	40	110	90	40	60	4	14	77	112		10	1.7
15	40	115	95	45	65	4	14	69	130		10	2.7
20	40	120	105	58	75	4	14	71	160		10	3.8
25	40	125	115	68	85	4	14	82	160		10	5.0
32	40	130	140	78	100	4	18	117	250		17	6.7
40	40	140	150	88	110	4	18	121	250		17	8.0
50	40	150	165	102	125	4	18	128	250	F07	17	10.0
65	40	170	185	122	145	8	18	158	250		17	19.0
80	40	180	200	138	160	8	18	182	370	F10	22	25.0
100	40	190	235	162	190	8	22	194	370	F10	22	30.0
125	40	325	270	188	220	8	26	195	520	F10	22	50.0
150	40	350	300	218	250	8	26	225	700	F12	27	72.0
200	40	400	375	285	320	12	30	260	700	F12	27	108.0
250*	40	450	450	345	385	12	38	260	700	F12	27	135.0

*Reduced bore, clear span 200.

Example of order: Ball valve type KFK-D DN 100 with flanged connection PN 16 according to DIN EN 1092-1
KFK-D 100 26

Parts list KFK-D

Pos.	Designation	Material*
20	Flange	Stainless steel
30	Ball	Stainless steel
40	Seal	PTFE
50	Stop washer	Stainless steel, steel
60	Stem	Stainless steel
80	O-ring	FPM
90	Hand lever	Zinc die casting, casting
100	O-ring	FPM
110	Bolt	
120	Nut	
	Washer	
130	Sliding ring	PTFE
140	Stop pin	
160	Bolt	
180	Pin	Stainless steel
190	Bearing shell	Stainless steel
200	O-ring	FPM

*Standard (can vary according to nominal width), other materials on request.
Due to the design, not all items are used for all nominal widths.

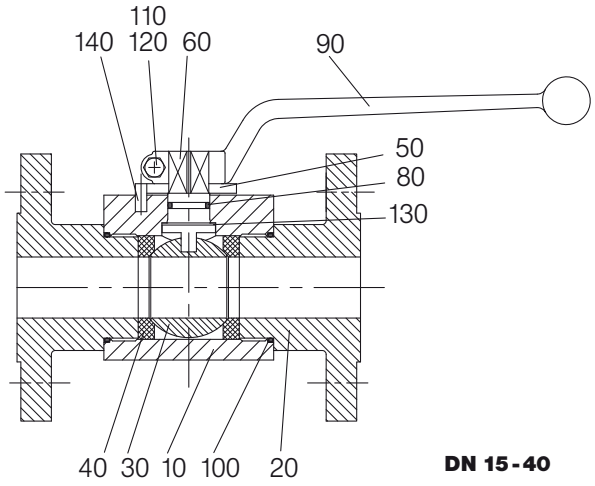

DN 15 - 40

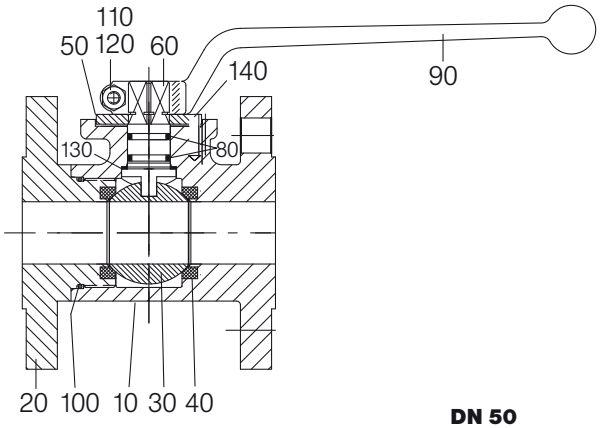

DN 50

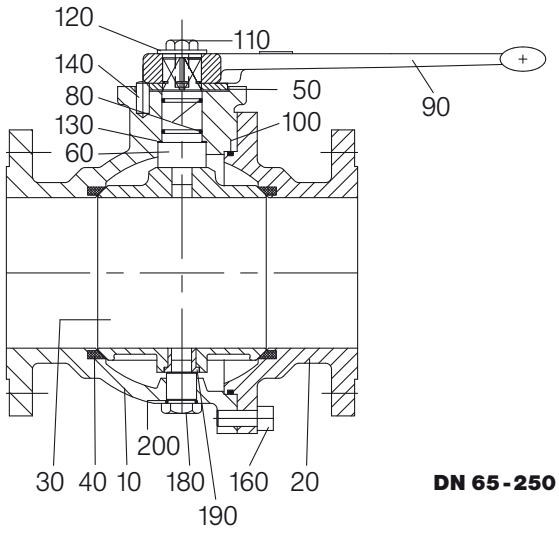

DN 65 - 250

Please ask separately, where requirements exceed the standard conditions of use listed in this data sheet.
As a matter of principle, the operating and maintenance instructions, in particular the safety instructions must be observed!
Operating and maintenance instructions as well as the approval certificates can be downloaded at www.von-scheven.de.

We reserve the right to carry out technical modifications.

Ball valve EFK, stainless steel, economy series

With DIN flange

DN 15 - 200 PN max. 40

Series 26 – PN 16 according to DIN EN 1092-1
28 – PN 40 according to DIN EN 1092-1

Face-to-face lengths DIN EN 558 FTF basic series 27 (formerly: DIN 3202-1 Series F4)

Temperature range Permissible operating temperature: -10°C to +200°C

Materials

Housing:	1.4408
Ball:	1.4408
Stem:	1.4404
Ball seals:	PTFE
Stem seal:	PTFE

Technical specification The 2-part stainless steel ball valve with flange, type EFK, is suitable for numerous technical applications with a maximum operating pressure of up to 40 bar. The stem seal is ensured by a packing seal.
The output flange according to DIN ISO 5211 is useful through the use of additional add-ons as interfaces to actuators.

Due to the design, not all items are used for all nominal widths.
Please ask separately, where requirements exceed the standard conditions of use listed in this data sheet.
As a matter of principle, the operating and maintenance instructions, in particular the safety instructions must be observed!
Operating and maintenance instructions as well as the approval certificates can be downloaded at www.von-scheven.de.

We reserve the right to carry out technical modifications.

2.040 EN 08/17

Technical data EFK

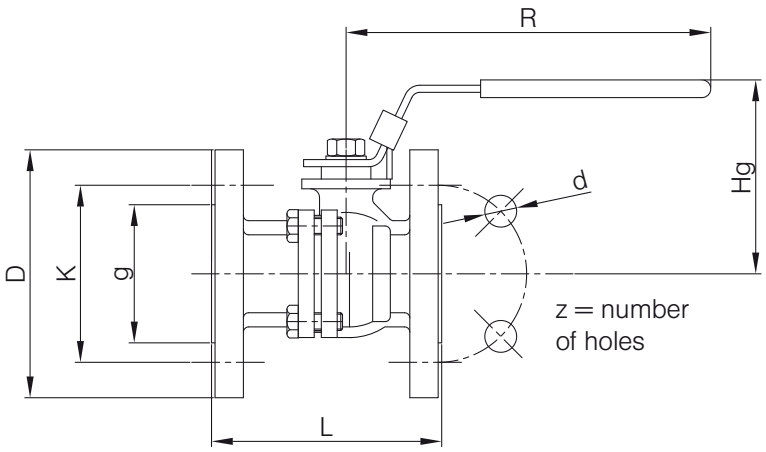

Series 26 (PN 16 according to DIN EN 1092-1)

DN	PN	Clear width	L	D	g	K	z	d	Hg	R	Weight
mm	bar	mm	mm	mm	mm	mm		mm	mm	mm	kg
15	40	15	115	95	45	65	4	14	85	170	2.3
20	40	20	120	105	58	75	4	14	87	170	2.9
25	40	25	125	115	68	85	4	14	105	205	3.9
32	40	32	130	140	78	100	4	18	111	205	5.5
40	40	38	140	150	88	110	4	18	129	265	7.3
50	40	50	150	165	102	125	4	18	134	265	10.0
65	16	63	170	185	122	145	4	18	146	300	15.3
80	16	76	180	200	138	160	8	18	162	390	19.4
100	16	100	190	220	158	180	8	18	182	390	25.7
125	16	125	325	250	186	210	8	18	225	750	43.0
150	16	150	350	285	212	240	8	22	275	750	67.0
200	16	200	400	340	268	295	12	22	340	1000	104.0

Series 28 (PN 40 according to DIN EN 1092-1)

DN	PN	Clear width	L	D	g	K	z	d	Hg	R	Weight
mm	bar	mm	mm	mm	mm	mm		mm	mm	mm	kg
15	40	15	115	95	45	65	4	14	85	170	2.3
20	40	20	120	105	58	75	4	14	87	170	2.9
25	40	25	125	115	68	85	4	14	105	205	3.9
32	40	32	130	140	78	100	4	18	111	205	5.5
40	40	38	140	150	88	110	4	18	129	265	7.3
50	40	50	150	165	102	125	4	18	134	265	10.0

Example of order: Ball valve type EFK DN 100 with flange DN 100 PN 16
EFK 100 26

Flange ball valve KFL-B, ductile cast iron, long face-to-face length

With DIN flange

DN 25 - 200 PN max.16

Series 25 – PN 10 according to DIN EN 1092-1
26 – PN 16 according to DIN EN 1092-1

Face-to-face lengths DIN EN 558 FTF basic series 1 (formerly: DIN 3202-1 Series F1)

Temperature range Standard: -10°C to +150°C; DVGW -20°C to +60°C
On request: -20°C to +250°C

Range of use Liquids: Liquids group 1 and 2 according to PED 2014/68/EU Article 13
Gases: Liquids group 1 and 2 according to PED 2014/68/EU Article 13
As a matter of principle, the resistance to the flow medium must be ensured.

Approvals Series 26: DVGW for gas PN 16
TÜV-Component mark
HTB (DN 32-150, MOP 5)
Technical instructions on air quality control (TA Luft)

Technical specification The KFL-B type ball valve consists of a 2-part body. Up to nominal width DN 100, the flange is screwed into the body. From nominal width DN 125, the two body parts are flanged together. The stem is blowout-proof and, from nominal width DN 32 is provided with a two-fold O-ring seal. It is possible to attach the actuators from DN 32 via the standard ISO flanged connection.

2.050 EN 08/17

Technical data KFL-B

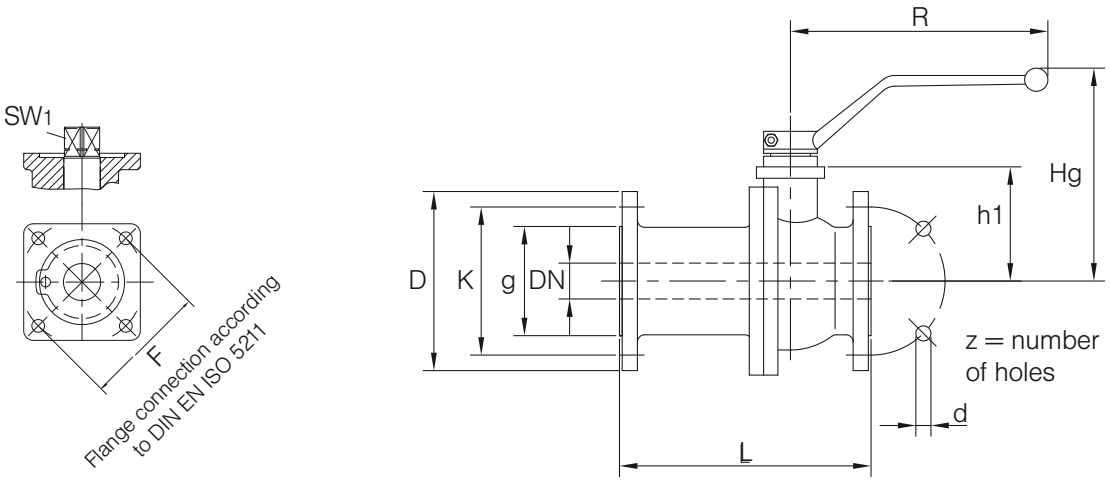

Series 25 (PN 10 according to DIN EN 1092-1)

DN	PN	L	D	g	K	z	d	Hg	R	h1	ISO Output flange	SW1	Weight
mm	bar	mm	mm	mm	mm		mm	mm	mm	mm		mm	kg
25	10	160	115	68	85	4	14	82	160	–	–	10	4.5
32	10	180	140	78	100	4	18	117	250	60	F07	17	6.7
40	10	200	150	88	110	4	18	121	250	64	F07	17	8.0
50	10	230	165	102	125	4	18	128	250	71	F07	17	10.0
65	10	290	185	122	145	4	18	158	250	101	F07	17	20.5
80	10	310	200	138	160	8	18	182	370	131	F10	22	29.5
100	10	350	220	158	180	8	18	194	370	144	F10	22	36.0
125	10	400	250	188	210	8	18	195	520	163	F10	22	50.0
150	10	480	285	212	240	8	22	225	700	194	F12	27	72.0
200	10	600	340	268	295	8	22	260	700	231	F12	27	108.0

Series 26 (PN 16 according to DIN EN 1092-1)

DN	PN	L	D	g	K	z	d	Hg	R	h1	ISO Output flange	SW1	Weight
mm	bar	mm	mm	mm	mm		mm	mm	mm	mm		mm	kg
25	16	160	115	68	85	4	14	82	160	–	–	10	4.5
32	16	180	140	78	100	4	18	117	250	60	F07	17	6.7
40	16	200	150	88	110	4	18	121	250	64	F07	17	8.0
50	16	230	165	102	125	4	18	128	250	71	F07	17	10.0
65	16	290	185	122	145	4	18	158	250	101	F07	17	20.5
80	16	310	200	138	160	8	18	182	370	131	F10	22	29.5
100	16	350	220	158	180	8	18	194	370	144	F10	22	36.0
125	16	400	250	188	210	8	18	195	520	163	F10	22	50.0
150	16	480	285	212	240	8	22	225	700	194	F12	27	72.0
200	16	600	340	268	295	12	22	260	700	231	F12	27	108.0

Example of order: Ball valve type KFL-B DN 100 with flanged connection
PN 16 according to DIN EN 1092-1 Series 26
KFL-B 100 26

Parts list KFL-B

Pos.	Designation	Material*
10	Body	Casting
20	Flange	Casting
30	Ball	Brass, steel, casting
40	Seal	PTFE
50	Stop washer	Steel
60	Stem	Brass, steel
70	Fitting	Brass
80	O-ring	FPM
90	Hand lever	Zinc die casting, casting
100	O-ring	FPM
110	Bolt	
120	Nut	
	Washer	
130	O-ring	FPM
	Sliding ring	PTFE
140	Stop pin	
160	Bolt	

*Standard (can vary according to nominal width), other materials on request.
Due to the design, not all items are used for all nominal widths.

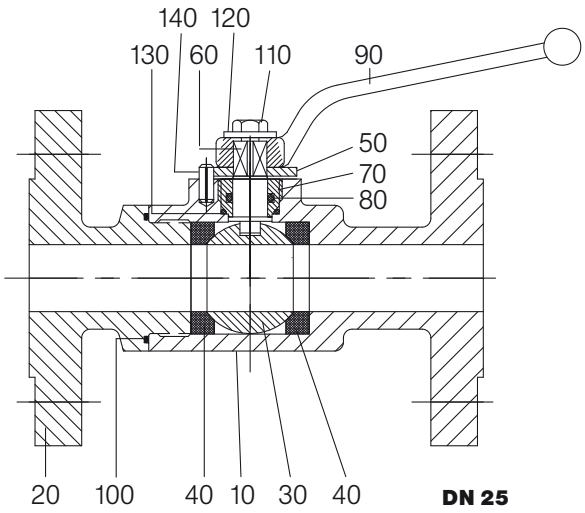

DN 25

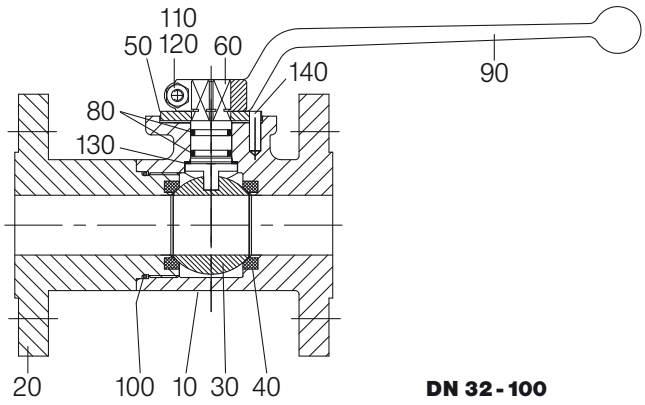

DN 32-100

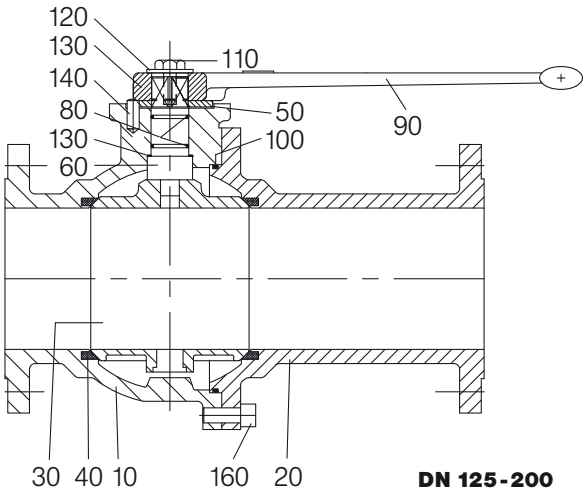

DN 125-200

Please ask separately, where requirements exceed the standard conditions of use listed in this data sheet.
As a matter of principle, the operating and maintenance instructions, in particular the safety instructions must be observed!
Operating and maintenance instructions as well as the approval certificates can be downloaded at www.von-scheven.de.

We reserve the right to carry out technical modifications.

Flange ball valve KFL-C, steel, long face-to-face length

With DIN flange

DN 10 - 250 PN max. 320

Series
25 – PN 10 according to DIN EN 1092-1
26 – PN 16 according to DIN EN 1092-1
27 – PN 25 according to DIN EN 1092-1
28 – PN 40 according to DIN EN 1092-1
29 – PN 63 according to DIN EN 1092-1
34 – PN 100 according to DIN EN 1092-1
35 – PN 160 according to DIN EN 1092-1
36 – PN 250 according to DIN EN 1092-1
37 – PN 320 according to DIN EN 1092-1

Face-to-face lengths
DIN EN 558 FTF basic series 1 (formerly: DIN 3202-1 Series F1)

Temperature range
Standard: -10°C to +90°C; DVGW -20°C to +60°C
On request: -50°C to +250°C

Range of use
Liquids: Liquids group 1 and 2 according to PED 2014/68/EU Article 13
Gases: Liquids group 1 and 2 according to PED 2014/68/EU Article 13
As a matter of principle, the resistance to the flow medium must be ensured.

Approvals
Series 26: DVGW for gas (up to DN 125)
Series 27, 28: DVGW for gas (up to DN 100)
TÜV-Component mark
Technical instructions on air quality control (TA Luft)

Technical specification
The KFL-C type ball valve consists of a 3-part, from DN 100 of a 2-part body. Up to nominal width DN 80, the flange is screwed into the body. From nominal width DN 100, the two body parts are flanged together. The stem is blowout-proof and, from nominal width DN 32 is provided with a two-fold O-ring seal.
Ball valves with DVGW approval PN 40 are equipped with a manual gear from DN 150 forth.

2.060 EN 08/17

Technical data KFL-C

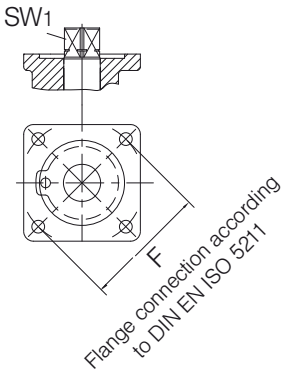

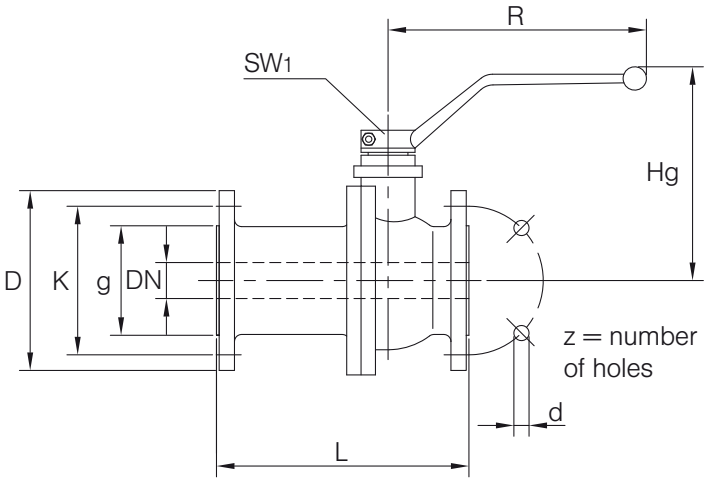

Flanged ball valves up to DN 50 and up to PN 40 are supplied with swiveling flanges by default.

Series 25 (PN 10 according to DIN EN 1092-1)

DN mm	PN bar	L mm	D mm	g mm	K mm	z	d mm	Hg mm	R mm	F DIN EN ISO 5211	SW1 mm	Weight kg
10	10	130	90	40	60	4	14	67	130		10	1.9
15	10	130	95	45	65	4	14	69	130		10	2.4
20	10	150	105	58	75	4	14	71	130		10	3.3
25	10	160	115	68	85	4	14	82	160		10	4.4
32	10	180	140	78	100	4	18	117	250		17	8.0
40	10	200	150	88	110	4	18	121	250		17	9.0
50	10	230	165	102	125	4	18	128	250	F07	17	13.0
65	10	290	185	122	145	4	18	158	250		17	20.5
80	10	310	200	138	160	8	18	182	370	F10	22	29.5
100	10	350	220	158	180	8	18	194	370	F10	22	36.0
125	10	400	250	188	210	8	18	195	520	F10	22	50.0
150	10	480	285	212	240	8	22	225	700	F12	27	72.0
200	10	600	340	268	295	8	22	260	700	27	F12	108.0
250*	10	730	395	320	350	12	22	260	700	27	F12	135.0

*Reduced bore, clear span 200.

Series 26 (PN 16 according to DIN EN 1092-1)

DN mm	PN bar	L mm	D mm	g mm	K mm	z	d mm	Hg mm	R mm	F DIN EN ISO 5211	SW1 mm	Weight kg
10	16	130	90	40	60	4	14	67	130		10	1.9
15	16	130	95	45	65	4	14	69	130		10	2.4
20	16	150	105	58	75	4	14	71	130		10	3.3
25	16	160	115	68	85	4	14	82	160		10	4.4
32	16	180	140	78	100	4	18	117	250		17	8.0
40	16	200	150	88	110	4	18	121	250		17	9.0
50	16	230	165	102	125	4	18	128	250	F07	17	13.0
65	16	290	185	122	145	4	18	158	250		17	20.5
80	16	310	200	138	160	8	18	182	370	F10	22	29.5
100	16	350	220	158	180	8	18	194	370	F10	22	36.0
125	16	400	250	188	210	8	18	195	520	F10	22	50.0
150	16	480	285	212	240	8	22	225	700	F12	27	72.0
200	16	600	340	268	295	12	22	260	700	F12	27	108.0
250*	16	730	405	320	355	12	22	260	700	F12	27	135.0

*Reduced bore, clear span 200.

Series 27 (PN 25 according to DIN EN 1092-1)

DN mm	PN bar	L mm	D mm	g mm	K mm	z	d mm	Hg mm	R mm	F DIN EN ISO 5211	SW1 mm	Weight kg
10	25	130	90	40	60	4	14	67	130		10	1.9
15	25	130	95	45	65	4	14	69	130		10	2.4
20	25	150	105	58	75	4	14	71	130		10	3.3
25	25	160	115	68	85	4	14	82	160		10	4.4
32	25	180	140	78	100	4	18	117	250		17	8.0
40	25	200	150	88	110	4	18	121	250		17	9.0
50	25	230	165	102	125	4	18	128	250	F07	17	13.0
65	25	290	185	122	145	8	18	158	250		17	20.5
80	25	310	200	138	160	8	18	182	370	F10	22	29.5
100	25	350	235	162	190	8	22	194	370	F10	22	36.0
125	25	400	270	188	220	8	26	195	520	F10	22	50.0
150	25	480	300	218	250	8	26	225	700	F12	27	72.0
200	25	600	360	278	310	12	26	260	700	F12	27	108.0
250*	25	730	425	335	370	12	30	260	700	F12	27	135.0

*Reduced bore, clear span 200.

Series 28 (PN 40 according to DIN EN 1092-1)

DN mm	PN bar	L mm	D mm	g mm	K mm	z	d mm	Hg mm	R mm	F DIN EN ISO 5211	SW1 mm	Weight kg
10	40	130	90	40	60	4	14	67	130		10	1.9
15	40	130	95	45	65	4	14	69	130		10	2.4
20	40	150	105	58	75	4	14	71	130		10	3.3
25	40	160	115	68	85	4	14	82	160		10	4.4
32	40	180	140	78	100	4	18	117	250		17	8.0
40	40	200	150	88	110	4	18	121	250		17	9.0
50	40	230	165	102	125	4	18	128	250	F07	17	13.0
65	40	290	185	122	145	8	18	158	250		17	20.5
80	40	310	200	138	160	8	18	182	370	F10	22	29.5
100	40	350	235	162	190	8	22	194	370	F10	22	36.0
125	40	400	270	188	220	8	26	195	520	F10	22	50.0
150	40	480	300	218	250	8	26	225	700	F12	27	72.0
200	40	600	375	285	320	12	30	260	700	F12	27	108.0
250*	40	730	450	345	385	12	30	260	700	F12	27	135.0

*Reduced bore, clear span 200.

Series 29 (PN 63 according to DIN EN 1092-1)

DN mm	PN bar	L mm	D mm	g mm	K mm	z	d mm	Hg mm	R mm	F DIN EN ISO 5211	SW1 mm	Weight kg
10	63	130	100	40	70	4	14	67	130		10	2.3
15	63	130	105	45	75	4	14	69	130		10	2.7
20	63	150	130	58	90	4	18	71	130		10	3.5
25	63	160	140	68	100	4	18	82	160		10	4.6
32	63	180	155	78	110	4	22	117	250		17	8.6
40	63	200	170	88	125	4	22	121	250		17	10.0
50	63	230	180	102	135	4	22	128	250	F07	17	15.0
65	63	290	205	122	160	8	22	158	250		17	23.0
80	63	310	215	138	170	8	22	182	350	F10	22	33.5
100	63	350	250	162	200	8	26	194	350	F10	22	40.0

Series 34 (PN 100 according to DIN EN 1092-1)
Series 35 (PN 160 according to DIN EN 1092-1)

DN mm	PN bar	L mm	D mm	g mm	K mm	z	d mm	Hg mm	R mm	F DIN EN ISO 5211	SW1 mm	Weight kg
10	100–160	130	100	40	70	4	14	67	130		10	2.3
15	100–160	130	105	45	75	4	14	69	130		10	2.7
20	100–160	150	130	58	90	4	18	71	130		10	3.5
25	100–160	160	140	68	100	4	18	82	160		10	4.6
32	100–160	180	155	78	110	4	22	117	250		17	8.6
40	100–160	200	170	88	125	4	22	121	250		17	10.0
50	100–160	230	195	102	145	4	26	128	250	F07	17	18.0
65	100–160	290	220	122	170	8	26	158	250		17	19.0
80	100–160	310	230	138	180	8	26	182	350	F10	22	29.0

Series 36 (PN 250 according to DIN EN 1092-1)

DN mm	PN bar	L mm	D mm	g mm	K mm	z	d mm	Hg mm	R mm	F DIN EN ISO 5211	SW1 mm	Weight kg
10	250	130	125	40	85	4	18	67	130		10	2.6
15	250	130	130	45	90	4	18	69	130		10	2.7
20	250	150	135	55	195	4	18	71	130		10	3.5
25	250	160	150	68	105	4	22	105	160		10	4.6
40	250	200	185	88	135	4	26	121	250		17	18.0
50	250	230	200	102	150	8	26	128	250	F07	17	21.0

Series 37 (PN 320 according to DIN EN 1092-1)

DN mm	PN bar	L mm	D mm	g mm	K mm	z	d mm	Hg mm	R mm	F DIN EN ISO 5211	SW1 mm	Weight kg
10	320	130	125	40	85	4	18	67	130		10	2.6
15	320	130	130	45	90	4	18	69	130		10	2.7
20	320	150	150	55	105	4	22	71	130		10	3.5
25	320	160	160	68	115	4	22	82	160		10	4.6
40	320	200	195	88	145	4	26	121	250		17	21.5
50	320	230	210	102	160	8	26	128	250	F07	17	25.0

Example of order: Ball valve type KFL-C DN 100 with flange PN 16 according to DIN EN 1092-1
KFL-C 100 26

Parts list KFL-C

Pos.	Designation	Material*
10	Body	Forged steel, steel casting
20	Flange	Steel, steel casting
30	Ball	Brass, steel, casting
40	Seal	PTFE, OM
50	Stop washer	Steel
60	Stem	Brass, steel
70	Fitting	Brass
80	O-ring	NBR, FPM
90	Hand lever	Zinc die-casting, steel, casting
100	O-ring	NBR, FPM
110	Bolt	
120	Nut	
	Washer	
130	O-ring	FPM
	Sliding ring	PTFE
140	Stop pin	
160	Bolt	
180	Pin	Steel
190	Bearing shell	
200	O-ring	NBR, FPM

*Standard (can vary according to nominal width), other materials on request.
Due to the design, not all items are used for all nominal widths.

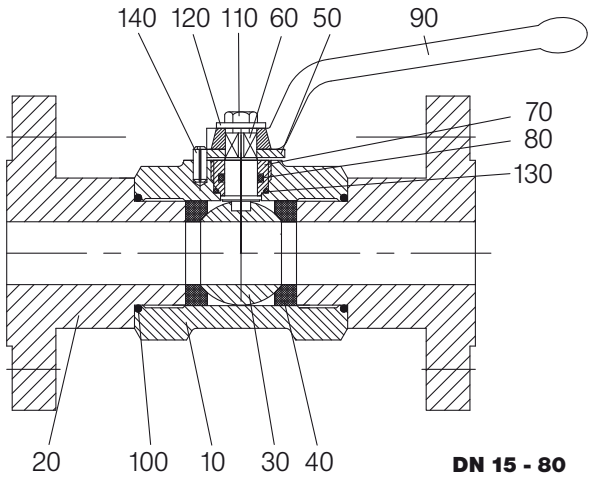

DN 15 - 80

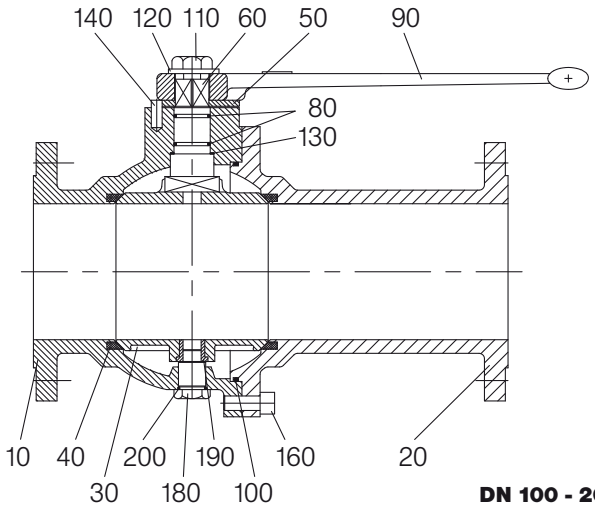

DN 100 - 200

Please ask separately, where requirements exceed the standard conditions of use listed in this data sheet.
As a matter of principle, the operating and maintenance instructions, in particular the safety instructions must be observed!
Operating and maintenance instructions as well as the approval certificates can be downloaded at www.von-scheven.de.

We reserve the right to carry out technical modifications.

Flange ball valve KFL-D, stainless steel, long face-to-face length

With DIN flange

DN 10 - 50 **PN max. 320**

Series
25 – PN 10 according to DIN EN 1092-1
26 – PN 16 according to DIN EN 1092-1
27 – PN 25 according to DIN EN 1092-1
28 – PN 40 according to DIN EN 1092-1
29 – PN 63 according to DIN EN 1092-1
34 – PN 100 according to DIN EN 1092-1
35 – PN 160 according to DIN EN 1092-1
36 – PN 250 according to DIN EN 1092-1
37 – PN 320 according to DIN EN 1092-1

Face-to-face lengths
DIN EN 558 FTF basic series 1 (formerly: DIN 3202-1 Series F1)

Temperature range
Standard: -10°C to +90°C; DVGW -20°C to +60°C
On request: -50°C to +250°C

Range of use
Liquids: Liquids group 1 and 2 according to PED 2014/68/EU Article 13
Gases: Liquids group 1 and 2 according to PED 2014/68/EU Article 13
As a matter of principle, the resistance to the flow medium must be ensured.

Approvals
Series 26, 27, 28: DVGW for gas
TÜV-Component mark
Technical instructions on air quality control (TA Luft)

Technical specification
The KFL-D type ball valve consists of a block resp. forged body with connector screwed in on both sides. The stem is blowout-proof and, from nominal width DN 32 is provided with a two-fold O-ring seal.

2.070 EN 08/17

Technical data KFL-D

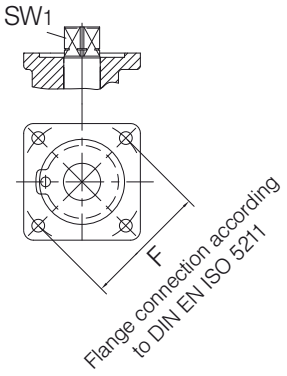

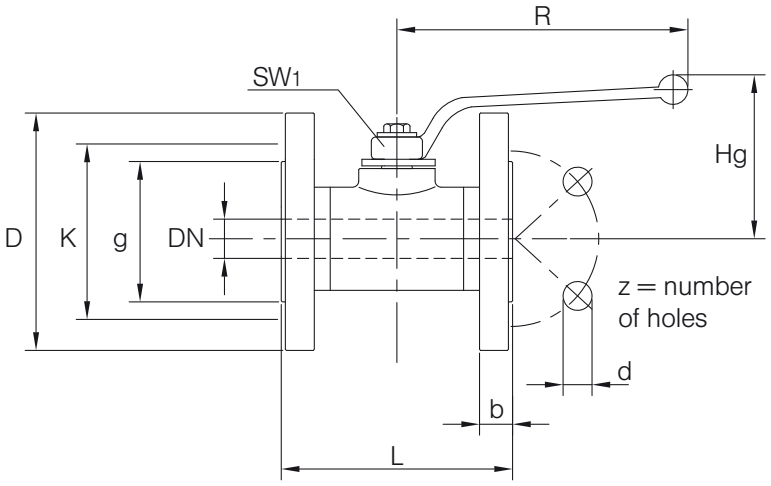

Flanged ball valves up to DN 50 and up to PN 40 are supplied with swiveling flanges by default.

Series 25 (PN 10 according to DIN EN 1092-1)
Series 26 (PN 16 according to DIN EN 1092-1)
Series 27 (PN 25 according to DIN EN 1092-1)
Series 28 (PN 40 according to DIN EN 1092-1)

DN mm	PN bar	L mm	D mm	g mm	K mm	z	d mm	Hg mm	R mm	SW1 mm	Weight kg
10	10–40	130	90	40	60	4	14	67	130	10	2.0
15	10–40	130	95	45	65	4	14	69	130	10	2.9
20	10–40	150	105	58	75	4	14	71	130	10	4.0
25	10–40	160	115	68	85	4	14	82	160	10	5.3
32	10–40	180	140	78	100	4	18	117	250	17	7.0
40	10–40	200	150	88	110	4	18	121	250	17	8.5
50	10–40	230	165	102	125	4	18	128	250	17	11.0

Series 29 (PN 63 according to DIN EN 1092-1)

DN mm	PN bar	L mm	D mm	g mm	K mm	z	d mm	Hg mm	R mm	SW1 mm	Weight kg
10	63	130	100	40	70	4	14	67	130	10	2.3
15	63	130	105	45	75	4	14	69	130	10	2.7
20	63	150	130	58	90	4	18	71	130	10	3.5
25	63	160	140	68	100	4	18	82	160	10	4.6
32	63	180	155	78	110	4	22	117	250	17	8.6
40	63	200	170	88	125	4	22	121	250	17	10.0
50	63	230	180	102	135	4	26	128	250	17	15.0

Series 34 (PN 100 according to DIN EN 1092-1)
Series 35 (PN 160 according to DIN EN 1092-1)

DN mm	PN bar	L mm	D mm	g mm	K mm	z	d mm	Hg mm	R mm	SW1 mm	Weight kg
10	100–160	130	100	40	70	4	14	67	130	10	2.3
15	100–160	130	105	45	75	4	14	69	130	10	2.7
20	100–160	150	130	58	90	4	18	71	130	10	3.5
25	100–160	160	140	68	100	4	18	82	160	10	4.6
32	100–160	180	155	78	110	4	22	117	250	17	8.6
40	100–160	200	170	88	125	4	22	121	250	17	10.0
50	100–160	230	195	102	145	4	26	128	250	17	18.0

Series 36 (PN 250 according to DIN EN 1092-1)

DN mm	PN bar	L mm	D mm	g mm	K mm	z	d mm	Hg mm	R mm	SW1 mm	Weight kg
10	250	130	125	40	85	4	18	67	130	10	2.6
15	250	130	130	45	90	4	18	69	130	10	2.7
20	250	150	150	55	105	4	22	71	130	10	3.5
25	250	150	160	68	105	4	22	82	160	10	4.6
40	250	185	195	88	135	4	26	121	250	17	21.5
50	250	200	200	102	150	8	26	128	250	17	25.0

Series 37 (PN 320 according to DIN EN 1092-1)

DN mm	PN bar	L mm	D mm	g mm	K mm	z	d mm	Hg mm	R mm	SW1 mm	Weight kg
10	320	130	125	40	85	4	18	67	130	10	2.6
15	320	130	130	45	90	4	18	69	130	10	2.7
20	320	150	150	55	105	4	22	71	130	10	3.5
25	320	160	160	68	115	4	22	82	160	10	4.6
40	320	200	195	88	145	4	26	121	250	17	21.5
50	320	230	210	102	160	8	26	128	250	17	25.0

Example of order: Ball valve type KFL-D DN 50 with flanged connection PN 40 according to DIN EN 1092-1
KFL-D 50 28

Parts list KFL-D

Pos.	Designation	Material*
10	Body	Stainless steel
20	Flange	Stainless steel
30	Ball	Stainless steel
40	Seal	PTFE, POM
50	Stop washer	Stainless steel, steel
60	Stem	Stainless steel
80	O-ring	FPM
90	Hand lever	Zinc die-casting , steel
100	O-ring	FPM
110	Bolt	
120	Nut	
	Washer	
130	Sliding ring	PTFE
140	Stop pin	

*Standard (can vary according to nominal width), other materials on request.
Due to the design, not all items are used for all nominal widths.

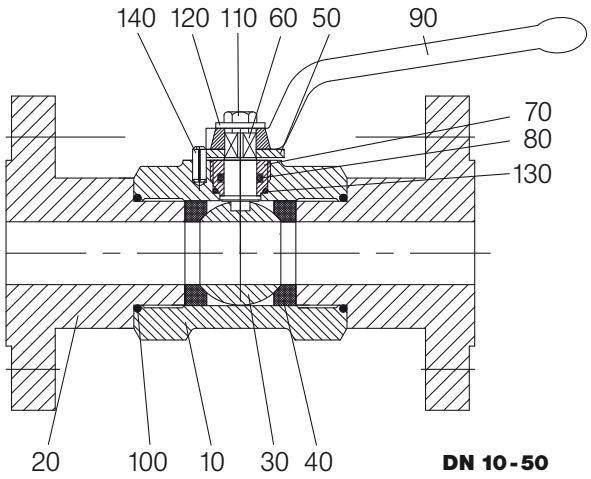

DN 10-50

Please ask separately, where requirements exceed the standard conditions of use listed in this data sheet.
As a matter of principle, the operating and maintenance instructions, in particular the safety instructions must be observed!
Operating and maintenance instructions as well as the approval certificates can be downloaded at www.von-scheven.de.

We reserve the right to carry out technical modifications.

Flange ball valve K-KFK-C, steel, compact face-to-face length

With DIN flange

DN 10 - 100 PN max. 40

Series 26 – PN 16 according to DIN EN 1092-1
28 – PN 40 according to DIN EN 1092-1

Temperature range Standard: -10°C to +150°C
On request: -50°C to +250°C

Range of use Liquids: Liquids group 1 and 2 according to PED 2014/68/EU Article 13
Gases: Liquids group 1 and 2 according to PED 2014/68/EU Article 13
As a matter of principle, the resistance to the flow medium must be ensured.

Technical specification The K-KFK-C type ball valve consists of a 2-part body with a flange screwed in on one side, or a close-coupled flange. When using the ball valve as an end fitting, the direction of flow must be noted due to the constructional design. Up to nominal width DN 25, the stem is fitted from the outside by means of a fitting. Simple replacement of the stem seal is ensured by the fitting used. A stem seal in accordance with the German Technical Instructions on Air Quality Control (TA Luft) is available as standard from nominal width DN 32 and can be used, on request, up to nominal width DN 25 for an additional charge. Actuators can be attached by means of an extension kit. This retrofit requirement is available as standard.

2.080 EN 08/17

Technical data K-KFK-C

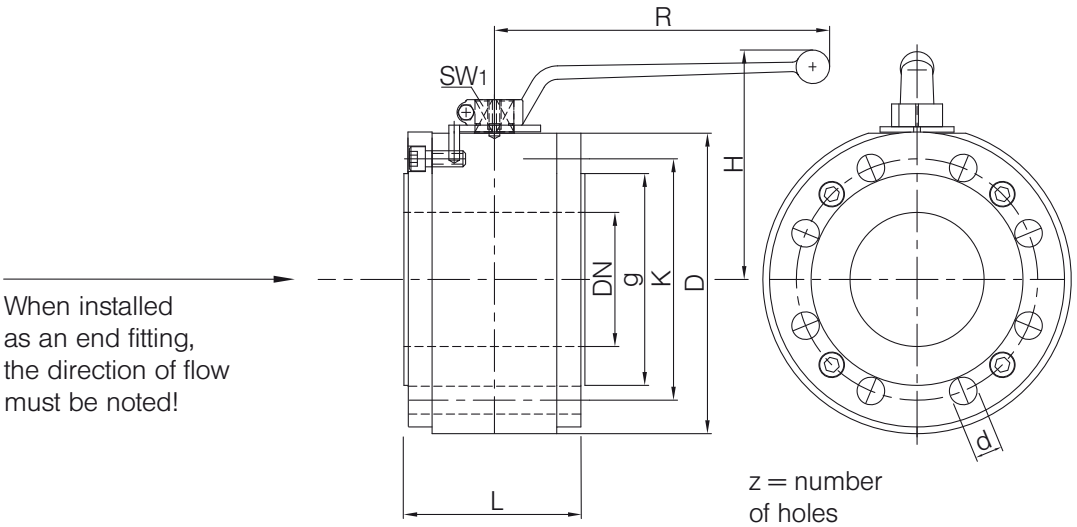

Series 26 (PN 16)

DN mm	PN bar	L mm	D mm	g mm	K mm	z	d mm	R mm	SW1 mm	H mm
10	40	35	90	40	60	4	M12	130	10	77
15	40	35	95	45	65	4	M12	130	10	77
20	40	40	105	58	75	4	M12	160	10	90
25	40	46	115	68	85	4	M12	160	10	108
32	40	58	140	78	100	4	M16	250	17	117
40	40	64	150	88	110	4	M16	250	17	121
50	40	82	165	102	125	4	M16	250	17	128
65	16	103	185	122	145	4	M16	250	17	150
80	16	118	200	138	160	8	M16	370	22	160
100	16	135	220	158	180	8	M16	370	22	172

Series 28 (PN 40)

DN mm	PN bar	L mm	D mm	g mm	K mm	z	d mm	R mm	SW1 mm	H mm
10	40	35	90	40	60	4	M12	130	10	77
15	40	35	95	45	65	4	M12	130	10	77
20	40	40	105	58	75	4	M12	160	10	90
25	40	46	115	68	85	4	M12	160	10	108
32	40	58	140	78	100	4	M16	250	17	117
40	40	64	150	88	110	4	M16	250	17	121
50	40	82	165	102	125	4	M16	250	17	128
65	40	103	185	122	145	8	M16	250	17	158
80	40	118	200	138	160	8	M16	370	22	182
100	40	145	235	162	190	8	M20	370	22	194

Example of order: Ball valve type K-KFK-C DN 100 with flange connection PN 16 according to DIN EN 1092-1
K-KFK-C 100 26

Parts list K-KFK-C

Pos.	Designation	Material*
10	Body	Steel
20	Flange	Steel
21	Bolt	
30	Ball	Brass, steel, casting
40	Stem	Brass, steel
50	Seal	PTFE
60	O-ring	NBR, FPM
70	Sliding ring	PTFE
80	O-ring	NBR, FPM
90	Stop pin	
130	Hand lever	Zinc die-casting
150	Stop washer	Steel
160	Bolt	
170	Nut	
	Washer	

*Standard (can vary according to nominal width), other materials on request.
Due to the design, not all items are used for all nominal widths.

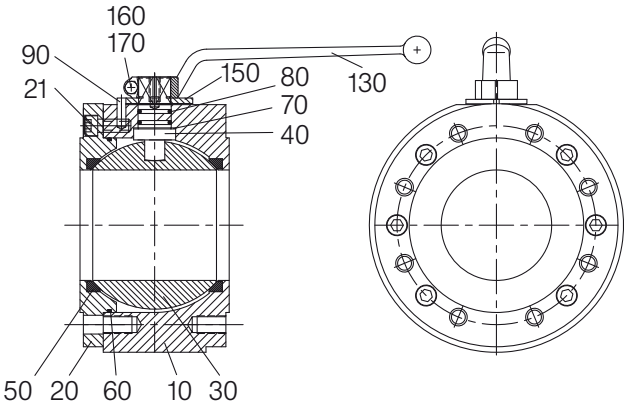

Please ask separately, where requirements exceed the standard conditions of use listed in this data sheet.
As a matter of principle, the operating and maintenance instructions, in particular the safety instructions must be observed!
Operating and maintenance instructions as well as the approval certificates can be downloaded at www.von-scheven.de.

We reserve the right to carry out technical modifications.

Flange ball valve K-KFK-D, stainless steel, compact face-to-face length

With DIN flange

DN 10 - 100 **PN max. 40**

Series 26 – PN 16 according to DIN EN 1092-1
28 – PN 40 according to DIN EN 1092-1

Temperature range Standard: -10°C to +150°C
On request: -50°C to +250°C

Range of use Liquids: Liquids group 1 and 2 according to PED 2014/68/EU Article 13
Gases: Liquids group 1 and 2 according to PED 2014/68/EU Article 13
As a matter of principle, the resistance to the flow medium must be ensured.

Technical specification The K-KFK-D type ball valve consists of a 2-part body with a flange screwed in on one side, or a close-coupled flange. When using the ball valve as an end fitting, the direction of flow must be noted due to the constructional design. Up to nominal width DN 25, the stem is fitted from the outside by means of a fitting. Simple replacement of the stem seal is ensured by the fitting used. A stem seal in accordance with the German Technical Instructions on Air Quality Control (TA Luft) is available as standard from nominal width DN 32 and can be used, on request, up to nominal width DN 25 for an additional charge. Actuators can be attached by means of an extension kit. This retrofit requirement is available as standard.

2.090 EN 08/17

Technical data K-KFK-D

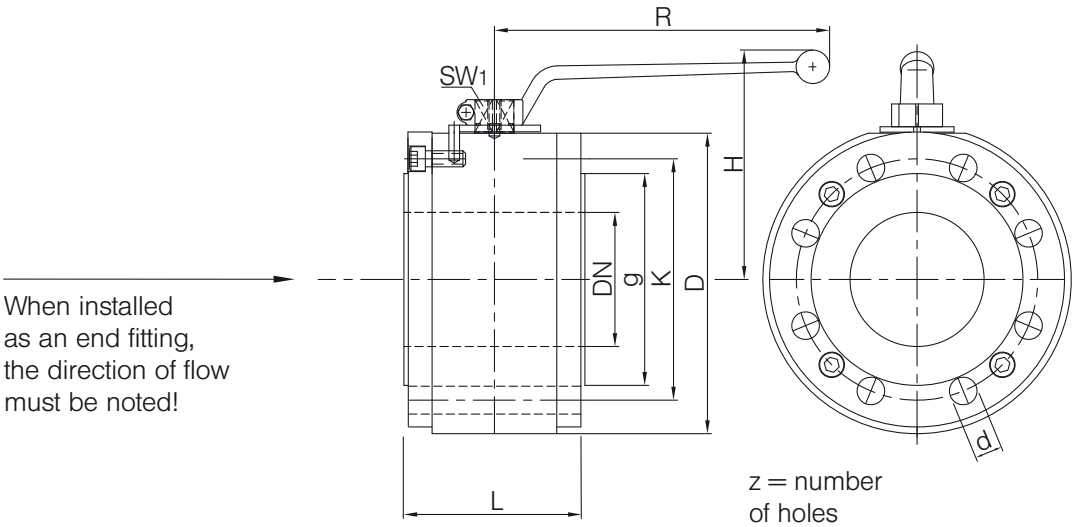

Series 26 (PN 16)

DN mm	PN bar	L mm	D mm	g mm	K mm	z	d mm	R mm	SW1 mm	H mm
10	40	35	90	40	60	4	M12	130	10	77
15	40	35	95	45	65	4	M12	130	10	77
20	40	40	105	58	75	4	M12	160	10	90
25	40	46	115	68	85	4	M12	160	10	108
32	40	58	140	78	100	4	M16	250	17	117
40	40	64	150	88	110	4	M16	250	17	121
50	40	82	165	102	125	4	M16	250	17	128
65	16	103	185	122	145	4	M16	250	17	150
80	16	118	200	138	160	8	M16	370	22	160
100	16	135	220	158	180	8	M16	370	22	172

Series 28 (PN 40)

DN mm	PN bar	L mm	D mm	g mm	K mm	z	d mm	R mm	SW1 mm	H mm
10	40	35	90	40	60	4	M12	130	10	77
15	40	35	95	45	65	4	M12	130	10	77
20	40	40	105	58	75	4	M12	160	10	90
25	40	46	115	68	85	4	M12	160	10	108
32	40	58	140	78	100	4	M16	250	17	117
40	40	64	150	88	110	4	M16	250	17	121
50	40	82	165	102	125	4	M16	250	17	128
65	40	103	185	122	145	8	M16	250	17	158
80	40	118	200	138	160	8	M16	370	22	182
100	40	145	235	162	190	8	M20	370	22	194

Example of order: Ball valve type K-KFK DN 100 with flanged connection PN 16 according to DIN EN 1092-1
K-KFK-D 100 26

Parts list K-KFK-D

Pos.	Designation	Material*
10	Body	Stainless steel
20	Flange	Stainless steel
21	Bolt	Stainless steel
30	Ball	Stainless steel
40	Stem	Stainless steel
50	Seal	PTFE
60	O-ring	FPM
70	Sliding ring	PTFE
80	O-ring	FPM
90	Stop pin	Stainless steel, steel
130	Hand lever	Zinc die-casting
150	Stop washer	Stainless steel, steel
160	Bolt	
170	Nut	
	Washer	

*Standard (can vary according to nominal width), other materials on request.
Due to the design, not all items are used for all nominal widths.

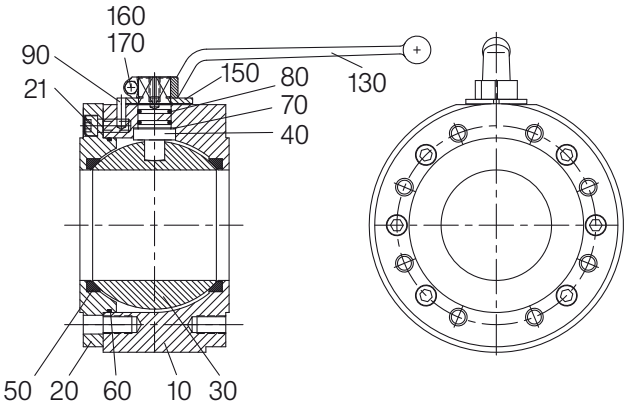

Please ask separately, where requirements exceed the standard conditions of use listed in this data sheet.
As a matter of principle, the operating and maintenance instructions, in particular the safety instructions must be observed!
Operating and maintenance instructions as well as the approval certificates can be downloaded at www.von-scheven.de.

We reserve the right to carry out technical modifications.

Flange ball valve K-KFK-CE, steel, economy series

With DIN flange

DN 15 –200 **PN max. 40**

General regulations BS EN ISO 17292 : 2004

Temperature range Standard: -10°C to +180°C
DVGW: -20°C to +60°C

Range of use For use as a shutoff valve (open-closed) for chemical products, foodstuffs, on pipes for gas, air, water supply.
With blowout safety stem.
Antistatic device from DN 25.
Upper connection ISO 5211

Approvals FIRE SAFE according to BS 6755 – API 6 FA API 607
DVGW for gas PN 16 (to DN 100)
TÜV for TA Luft

Please ask separately, where requirements exceed the standard conditions of use listed in this data sheet.
As a matter of principle, the operating and maintenance instructions, in particular the safety instructions must be observed!
Operating and maintenance instructions as well as the approval certificates can be downloaded at www.von-scheven.de.

We reserve the right to carry out technical modifications.

2.100 EN 08/17

Technical data K-KFK-CE

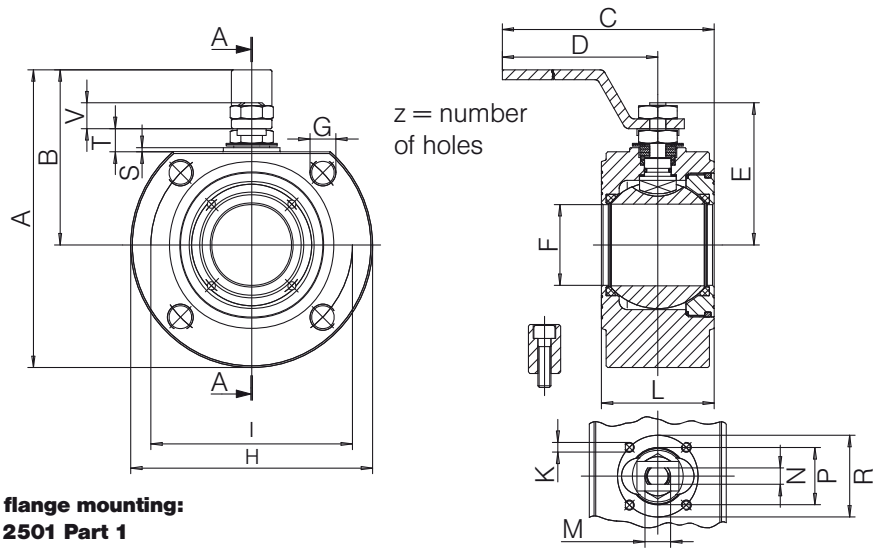

Connections suitable for flange mounting:
UNI – EN 109 2 and DIN 2501 Part 1

DN	PN	A	B	C	D	E	F	G	H	K	I	L	M	N	P	R	S	T	V	z	Porting pattern ISO	Cv-value	Weight
mm	bar	mm	mm	mm	mm	mm	mm	mm	mm	mm	mm	mm	mm	mm	mm	mm	mm	mm	mm				kg
15	40	110	65.0	160	140	48.0	15	M12	90	M5	65	35	M10	6	25.0	36	2.0	8.0	9.0	4	F03	20	1.345
20	40	120	70.0	160	140	51.0	20	M12	100	M5	75	38	M10	6	25.0	36	2.0	8.0	9.0	4	F03	60	1.810
25	40	137	82.0	200	180	62.5	25	M12	110	M5	85	43	M12	8	30.0	42	2.0	11.5	11.5	4	F04	100	2.505
32	40	150	85.0	205	180	67.0	32	M16	130	M5	100	54	M12	8	30.0	42	2.0	9.5	11.5	4	F04	130	3.995
40	40	172	102.0	260	230	80.0	40	M16	150	M6	110	60	M16	10	35.0	50	2.5	14.0	16.0	4	F05	170	5.540
50	40	185	110.0	265	230	87.0	50	M16	165	M6	125	70	M16	10	35.0	50	2.5	14.0	16.0	4	F05	280	7.300
65	16	225	137.5	400	350	119.5	65	M16	175	M8	145	95	M22	14	49.5	70	3.0	18.7	20.8	4	F07	510	15.000
65	40	225	137.5	400	350	119.5	65	M16	175	M8	145	95	M22	14	49.5	70	3.0	18.7	20.8	8	F07	510	15.000
80	40	245	150.0	410	350	129.5	78	M16	190	M8	160	122	M22	14	49.5	70	3.0	18.7	20.8	8	F07	770	19.500
100	16	275	165.0	580	508	148.5	96	M16	220	M10	180	140	M27	16	70.0	102	3.0	22.2	25.3	8	F10	1200	31.500
100	40	291	173.0	580	508	156.5	96	M20	235	M10	190	140	M27	16	70.0	102	3.0	22.2	–	8	F10	1200	37.000
125	16	309	181.0	455	370	166.5	118	M16	255	M10	210	185	M27	16	70.0	102	3.0	22.2	25.3	8	F10	2000	51.000
150	16	388	241.0	500	395	197.5	144	M20	295	M12	240	235	M42	26	–	125	–	4.0	29.0	8	F12	–	81.000
200	16	458	276.0	829	674	232.5	192	M20	365	M12	295	315	M42	26	–	125	–	4.0	29.0	12	F12	–	177.000

Flange ball valve K-KFK-DE, stainless steel, economy series

With DIN flange

DN 15 – 200 PN max. 40

General regulations BS EN ISO 17292:2004

Temperature range Standard: -20°C to +180°C
DVGW: -20°C to +60°C

Range of use For use as a shutoff valve (open-closed) for chemical products, foodstuffs, on pipes for gas, air, water supply.
Blowout-proof stem
Antistatic device: from DN 25 (on request from DN 15-DN 20).
Upper connection: ISO 4211

Approvals FIRE SAFE according to BS 6755 – API 6 FA API 607
DVGW for gas PN 16 (to DN 100)
TÜV for TA Luft

Please ask separately, where requirements exceed the standard conditions of use listed in this data sheet.
As a matter of principle, the operating and maintenance instructions, in particular the safety instructions must be observed!
Operating and maintenance instructions as well as the approval certificates can be downloaded at www.von-scheven.de.

We reserve the right to carry out technical modifications.

2.110 EN 08/17

Technical data K-KFK-DE

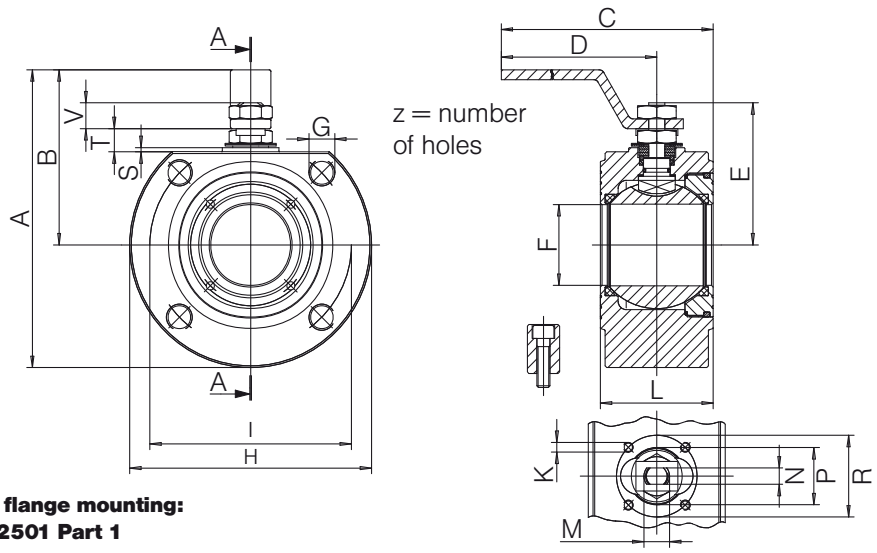

Connections suitable for flange mounting:
UNI – EN 1092 and DIN 2501 Part 1

DN	PN	A	B	C	D	E	F	G	H	K	I	L	M	N	P	R	S	T	V	z	Porting pattern ISO	Cv-value	Weight
mm	bar	mm	mm	mm	mm	mm	mm	mm	mm	mm	mm	mm	mm	mm	mm	mm	mm	mm	mm				kg
15	40	110	65.0	160	140	48.0	15	M12	90	M5	65	35	M10	6	25.0	36	2.0	8.0	9.0	4	F03	20	1.345
20	40	120	70.0	160	140	51.0	20	M12	100	M5	75	38	M10	6	25.0	36	2.0	8.0	9.0	4	F03	60	1.810
25	40	137	82.0	200	180	62.5	25	M12	110	M5	85	43	M12	8	30.0	42	2.0	11.5	11.5	4	F04	100	2.505
32	40	150	85.0	205	180	67.0	32	M16	130	M5	100	54	M12	8	30.0	42	2.0	9.5	11.5	4	F04	130	3.995
40	40	172	102.0	260	230	80.0	40	M16	150	M6	110	60	M16	10	35.0	50	2.5	14.0	16.0	4	F05	170	4.190
50	40	185	110.0	265	230	87.0	50	M16	165	M6	125	70	M16	10	35.0	50	2.5	14.0	16.0	4	F05	280	5.790
65	16	225	137.5	400	350	119.5	65	M16	175	M8	145	95	M22	14	49.5	70	3.0	18.7	20.8	4	F07	510	10.200
65	40	225	137.5	400	350	119.5	65	M16	175	M8	145	95	M22	14	49.5	70	3.0	18.7	20.8	8	F07	510	13.200
80	40	245	150.0	410	350	129.5	78	M16	190	M8	160	122	M22	14	49.5	70	3.0	18.7	20.8	8	F07	770	13.700
100	16	275	165.0	580	508	148.5	96	M16	220	M10	180	140	M27	16	70.0	102	3.0	22.2	25.3	8	F10	1200	20.000
100	40	291	173.0	580	508	156.5	96	M20	235	M10	190	140	M27	16	70.0	102	3.0	22.2	–	8	F10	1200	24.000
125	16	309	181.0	455	370	166.5	118	M16	255	M10	210	185	M27	16	70.0	102	3.0	22.2	25.3	8	F10	2000	51.220
150	16	388	241.0	500	395	197.5	144	M20	295	M12	240	235	M42	26	–	125	–	4.0	29.0	8	F12	–	80.960
200	16	458	276.0	829	674	232.5	192	M20	365	M12	295	315	M42	26	–	125	–	4.0	29.0	12	F12	–	177.060

Flange ball valve KFK-BK, ductile cast iron, ceramic lining

With DIN flange

DN 50 - 125 PN 16

Series 25 – PN 10 according to DIN EN 1092-1

Face-to-face lengths DIN EN 558 FTF basic series 27 (formerly: DIN 3202-1 Series F4)

Temperature range Permissible operating temperature: -10°C to +160°C
Other temperatures on request.

Range of use For abrasive materials. In addition, as a matter of principle, the resistance to the flow medium must be ensured.

Technical specification The KFK-BK type ball valve consists of a 2-part body. Up to nominal width DN 100, the half flange is screwed into the half body.
From nominal width DN 125, the two body parts are flanged together.
The stem is blowout-proof and is provided with a two-fold O-ring seal.
Body, screw-in flange and ball are internally coated with the aluminium oxide ceramic material Alotec 92 and the seal is also manufactured from this material.

Please ask separately, where requirements exceed the standard conditions of use listed in this data sheet.
As a matter of principle, the operating and maintenance instructions, in particular the safety instructions must be observed!
Operating and maintenance instructions as well as the approval certificates can be downloaded at www.von-scheven.de.

We reserve the right to carry out technical modifications.

2.120 EN 08/17

Technical data KFK-BK

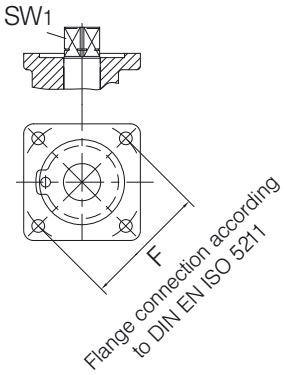

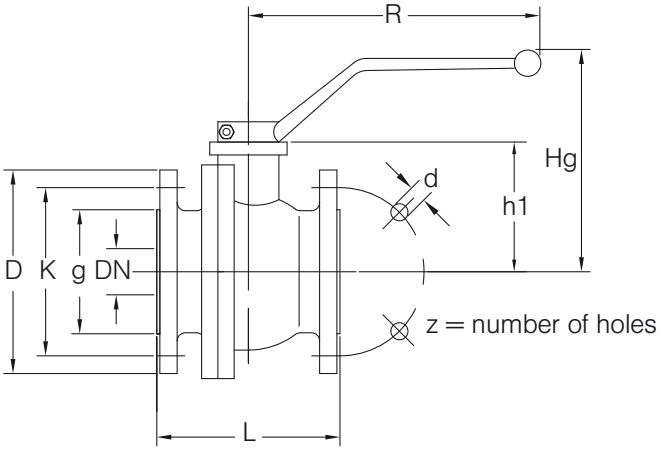

Series 26 (PN 16 according to DIN EN 1092-1)

DN	PN	L	D	g	K	z	d	Hg	R	h1	F	SW1	Weight
mm	bar	mm	mm	mm	mm		mm	mm	mm	mm	DIN EN ISO 5211	mm	kg
50	16	150	165	102	125	4	18	128	250	71	F07	17	13.0
65	16	170	185	122	145	4	18	158	250	101	F07	17	20.5
80	16	180	200	138	160	8	18	182	368	131	F10	22	29.5
100	16	190	220	158	180	8	18	194	358	144	F10	22	36.0
125	16	325	250	188	210	8	18	195	500	163	F10	22	50.0

Example of order: Ball valve type KFK-BK DN 100 with flanged connection PN 16 according to DIN EN 1092-1, internally coated with aluminium oxide ceramic material
KFK-BK 100 26

Parts list KFK-BK

Pos.	Designation	Material*
10	Body	Casting
	Internally coated with aluminium oxide ceramic material	
20	Flange	Casting
	Internally coated with aluminium oxide ceramic material	
30	Ball	Stainless steel
	Internally coated with aluminium oxide ceramic material	
40	Seal	ALOTEC 92
41	O-ring	NBR
42	O-ring	NBR
50	Stop washer	
60	Stem	Steel
80	O-ring	NBR
90	Hand lever	Zinc die-casting, casting
100	O-ring	NBR
130	Sliding ring	PTFE
140	Stop pin	
160	Bolt	

*Standard (can vary according to nominal width), other materials on request.

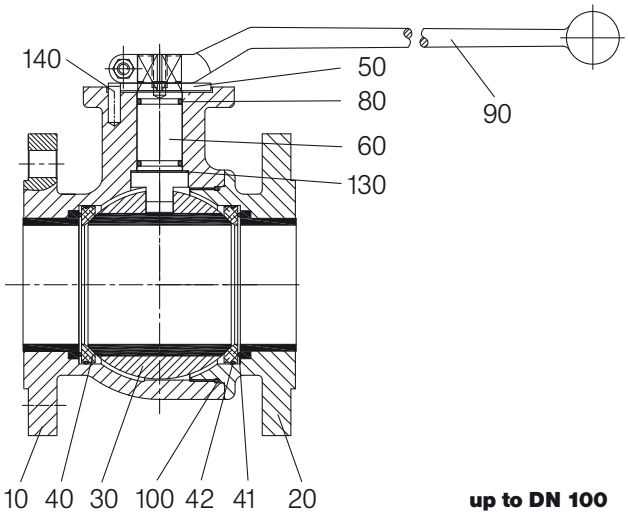

up to DN 100

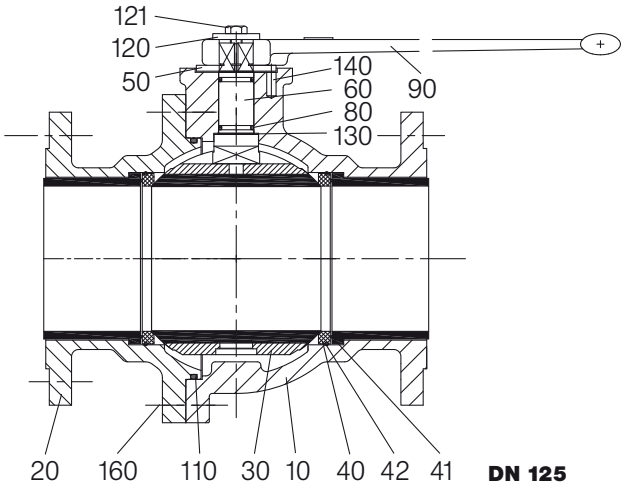

DN 125

Flange ball valve KFB-C/KFB-D, steel/stainless steel, ANSI face-to-face length

With ANSI flange

DN 15 – 200 max. Class 1500

Also available as stainless steel ball valve: KFB-D

Series
50 – Flansche according to ANSI/ASME B16.5 Class 150 RF/RTJ
51 – Flansche according to ANSI/ASME B16.5 Class 300 RF/RTJ
52 – Flansche according to ANSI/ASME B16.5 Class 600 RF/RTJ
53 – Flansche according to ANSI/ASME B16.5 Class 900 RF/RTJ
54 – Flansche according to ANSI/ASME B16.5 Class 1500 RF/RTJ

Face-to-face lengths
Lengths ANSI B 16.10 – Long series RF/RTJ

Temperature range
Standard: -10°C to +90°C
On request: -50°C to +250°C

Range of use
Liquids: Liquids group 1 and 2 according to PED 2014/68/EU Article 13
Gases: Liquids group 1 and 2 according to PED 2014/68/EU Article 13
As a matter of principle, the resistance to the flow medium must be ensured.

Approvals
TA Luft up to DN 25 optionally, from DN 32 standard

Technical specification
Up to DN 80, type KFB-C ball valve consists of a 3-part body with screwed in flanges. From nominal width DN 100, the two body parts are flanged together.
The stem is blowout-proof and, from nominal width DN 32 is provided with a two-fold O-ring seal.

2.200 EN 08/17

Technical data KFB-C/KFB-D

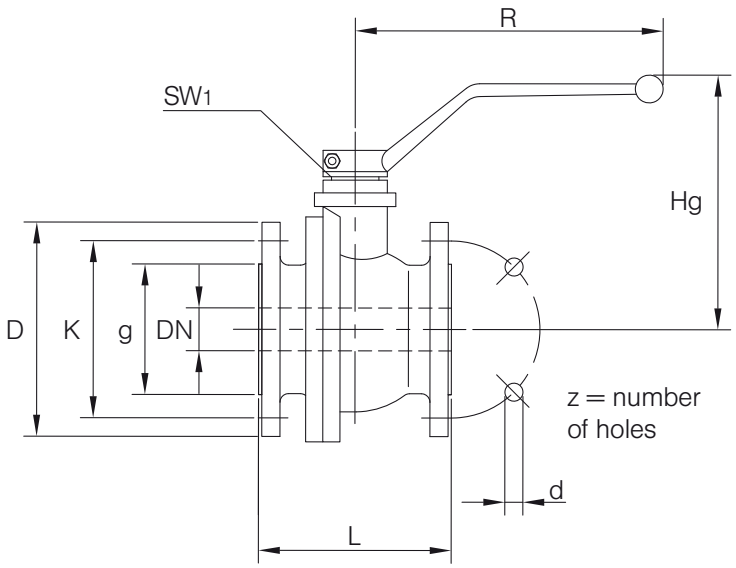

Series 50 (flanges according to ANSI B16.5 Class 150 – Raised Face (RF)

DN mm	DN	L RF	L RTJ	D mm	g mm	K mm	z	d mm	Hg mm	R mm	SW1 mm	Weight kg
15	1/2"	108	108	88.9	34.1	60.5	4	15.7	69	130	10	2.4
20	3/4"	117	117	98.6	42.9	69.9	4	15.7	71	130	10	3.3
25	1"	127	140	108.0	50.8	79.2	4	15.7	82	160	10	4.4
32	1 1/4"	140	153	117.3	63.5	88.9	4	15.7	117	250	17	6.7
40	1 1/2"	165	178	127.0	73.2	98.6	4	15.7	121	250	17	8.2
50	2"	178	191	152.4	91.9	120.7	4	19.1	128	250	17	11.2
65	2 1/2"	190	203	177.8	104.6	139.7	4	19.1	158	250	17	21.2
80	3"	203	216	190.5	127.0	152.4	4	19.1	182	370	22	27.3
100	4"	229	242	228.6	157.2	190.5	8	19.1	194	370	22	36.8
125	5"	325*	267	254.0	185.7	215.9	8	22.4	195	520	22	51.0
150	6"	394	407	279.4	215.9	241.3	8	22.4	225	700	27	74.5
200	8"	457	470	342.7	269.7	298.5	8	22.4	260	700	27	115.0

*Deviating from the standard face-to-face length ANSI B 16.10 – Long series RF/RTJ; where necessary ask for special face-to-face length.

Series 51 (flanges according to ANSI B16.5 Class 300 – Raised Face (RF)

DN mm	DN	L RF	L RTJ	D mm	g mm	K mm	z	d mm	Hg mm	R mm	SW1 mm	Weight kg
15	1/2"	140	151	95.2	35.0	66.5	4	15.7	69	130	10	2.6
20	3/4"	152	165	117.3	42.9	82.6	4	19.1	71	130	10	3.5
25	1"	165	178	124.0	50.8	88.9	4	19.1	105	160	10	4.6
32	1 1/4"	178	191	133.4	63.5	98.6	4	19.1	117	250	17	6.9
40	1 1/2"	190	203	155.4	73.2	114.3	4	22.4	121	250	17	8.5
50	2"	216	232	165.1	91.9	127.0	8	19.1	128	250	17	11.6
65	2 1/2"	241	257	190.5	104.6	149.2	8	22.4	158	250	17	21.7
80	3"	282	298	209.6	127.0	168.1	8	22.4	182	380	22	28.0
100	4"	305	321	254.0	157.2	200.2	8	22.4	194	370	22	37.9
125	5"	381	397	279.4	185.7	235.0	8	22.4	195	520	22	52.0
150	6"	403	419	317.5	215.9	269.7	12	22.4	225	700	27	76.0
200	8"	502	518	381.0	269.7	330.2	12	25.4	260	700	27	117.0

Series 52 (flanges according to ANSI B16.5 Class 600 – Raised Face (RF)

DN mm	DN	L RF	L RTJ	D mm	g mm	K mm	z	d mm	Hg mm	R mm	SW1 mm	Weight kg
15	1/2"	165	163	95.2	35.1	66.5	4	15.7	69	130	10	3.0
20	3/4"	190	190	117.3	42.9	82.6	4	19.1	71	130	10	4.5
25	1"	216	216	124.0	50.8	88.9	4	19.1	105	160	10	6.0
32	1 1/4"	229	229	133.4	63.5	98.6	4	19.1	117	250	17	10.0
40	1 1/2"	241	241	155.4	73.2	114.3	4	22.2	121	250	17	12.0
50	2"	292	295	165.1	91.9	127.0	8	19.1	128	250	17	17.0
65	2 1/2"	330	333	190.5	104.6	149.4	8	22.9	158	250	17	25.0
80	3"	356	359	209.6	127.0	168.1	8	22.4	182	350	22	32.0

Series 53 (flanges according to ANSI B16.5 Class 900 – Raised Face (RF)

DN mm	DN	L RF	L RTJ	D mm	g mm	K mm	z	d mm	Hg mm	R mm	SW1 mm	Weight kg
15	1/2"	216	216	120.7	35.1	82.6	4	22.4	69	130	10	5
20	3/4"	229	229	130.0	42.9	88.9	4	22.4	71	130	10	6
25	1"	254	254	149.4	50.8	101.6	4	25.4	82	160	10	8
32	1 1/4"	279	279	158.8	63.5	111.3	4	25.4	117	250	17	13
40	1 1/2"	305	305	177.8	73.2	124.0	4	28.4	121	250	17	15
50	2"	368	371	215.9	91.9	165.1	8	25.4	128	250	17	21
65	2 1/2"	419	422	244.3	104.6	190.5	8	28.4	158	250	17	28
80	3"	381	384	241.3	127.0	190.5	8	25.4	182	350	22	35

Series 54 (flanges according to ANSI B16.5 Class 1500 – Raised Face (RF)

DN mm	DN	L RF	L RTJ	D mm	g mm	K mm	z	d mm	Hg mm	R mm	SW1 mm	Weight kg
15	1/2"	216	216	120.7	35.1	82.6	4	22.4	69	130	10	5
20	3/4"	229	229	130.0	42.9	88.9	4	22.4	71	130	10	6
25	1"	254	254	149.4	50.8	101.6	4	25.4	82	160	10	8
32	1 1/4"	279	279	158.8	63.5	111.3	4	25.4	117	250	17	13
40	1 1/2"	305	305	177.8	73.2	124.0	4	28.4	121	250	17	15
50	2"	368	371	215.9	91.9	165.1	8	25.4	128	250	17	21

Example of order: Ball valve type KFB-C DN 100 with flanged connection According to ANSI B16.5 Class 300 RF
KFB-C 100 51-RF

Parts list		KFB-C	KFB-D
Pos.	Designation	Material*	Material*
10	Body	Forged steel	Stainless steel
		Steel casting	
20	Flange	Steel	Stainless steel
		Steel casting	
30	Ball	Brass, steel	Casting
		Stainless steel	
40	Seal	PTFE, POM	PTFE, POM
50	Stop washer	Steel	Steel, stainless steel
60	Stem	Brass, steel	Stainless steel
70	Fitting	Brass	–
80	O-ring	NBR	FPM
90	Hand lever	Zinc die-casting, steel, casting	
100	O-Ring	NBR, FPM	FPM
110	Bolt		
120	Nut		
	Washer		
130	O-ring	NBR, FPM	FPM
	Sliding ring	Sliding ring	Sliding ring
140	Stop pin		
160	Bolt		
180	Pin	Steel	Stainless steel
190	Bearing shell	Brass	Stainless steel
200	O-ring	NBR, FPM	

*Standard (can vary according to nominal width), other materials on request.
Due to the design, not all items are used for all nominal widths.

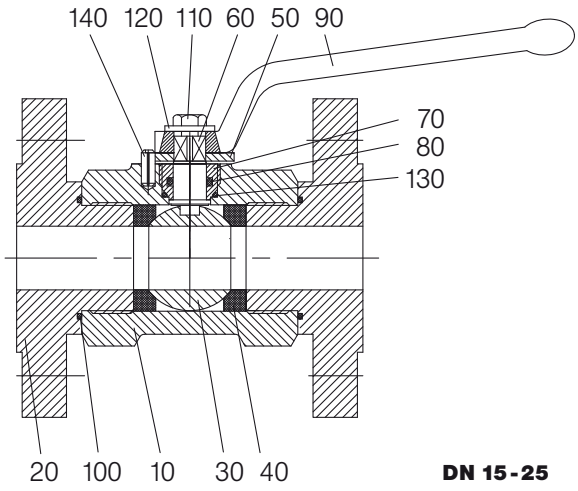

DN 15-25

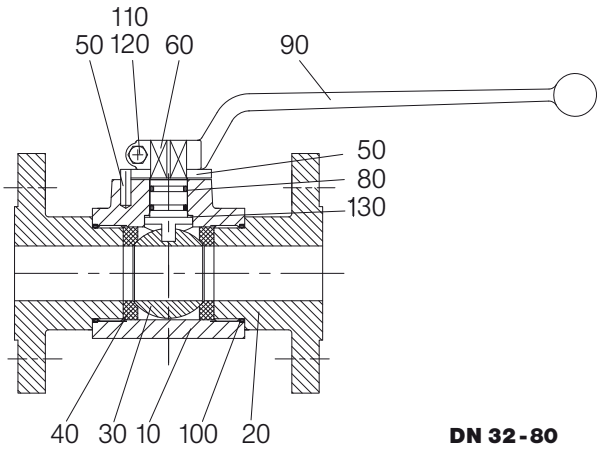

DN 32-80

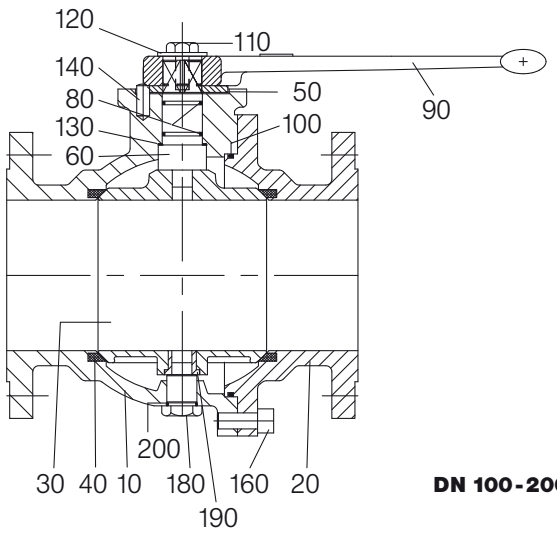

DN 100-200

Please ask separately, where requirements exceed the standard conditions of use listed in this data sheet.
As a matter of principle, the operating and maintenance instructions, in particular the safety instructions must be observed!
Operating and maintenance instructions as well as the approval certificates can be downloaded at www.von-scheven.de.

We reserve the right to carry out technical modifications.

Flange ball valve, K-KFB-C, steel, compact face-to-face length

With ANSI flange

DN 50 and 100 max. Class 1500

Series
52 – Class 600 RF
54 – Class 1500 RF
Flanges also according to RTJ are possible

Temperature range
Standard: -10°C to +90°C
On request: -50°C to +250°C

Range of use
Liquids: Liquids group 1 and 2 according to PED 2014/68/EU Article 13
Gases: Liquids group 1 and 2 according to PED 2014/68/EU Article 13
As a matter of principle, the resistance to the flow medium must be ensured.

Technical specification
The K-KFB-C type ball valve consists of a 2-part body with screwed in on one side, or close-coupled flange. When using the ball valve as an end fitting, the direction of flow must be noted due to the constructional design. A stem seal in accordance with the German Technical Instructions on Air Quality Control (TA Luft) is available as standard from nominal width DN 32.
Actuators can be attached by means of an extension kit. This retrofit requirement is available as standard.

Please ask separately, where requirements exceed the standard conditions of use listed in this data sheet.
As a matter of principle, the operating and maintenance instructions, in particular the safety instructions must be observed!
Operating and maintenance instructions as well as the approval certificates can be downloaded at www.von-scheven.de.

We reserve the right to carry out technical modifications.

2.220 EN 08/17

Technical data K-KFB-C

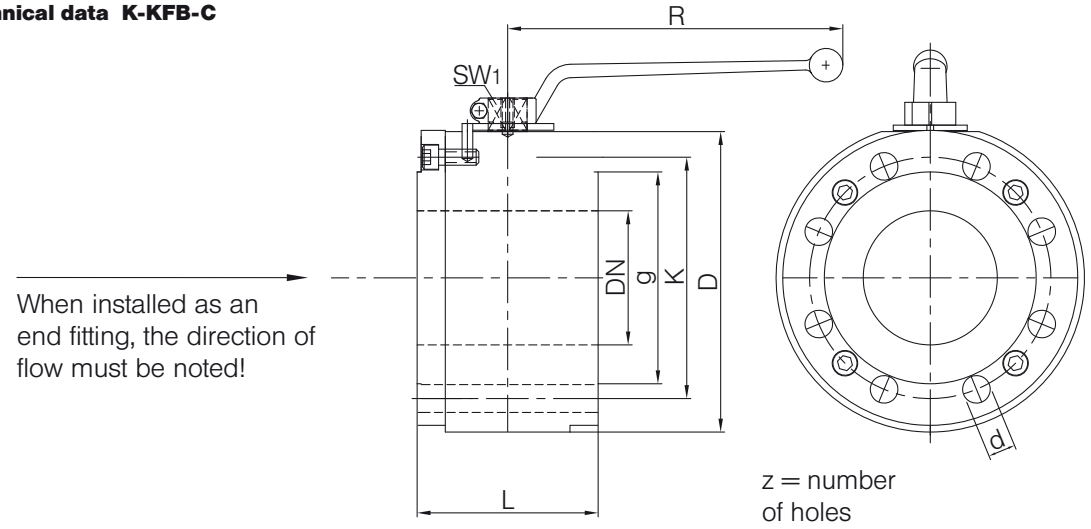

Series 52 (flanges according to ANSI B16.5 Class 600 – Raised Face (RF)

DN mm	Class	L mm	D mm	g mm	K mm	z mm	d mm	R mm	SW1 mm	H mm
50	600	105.0	165.1	92.1	127.0	8	19	300	17	133
100	600	156.6	268.0	157.2	215.9	8	M24	520	22	285

Series 54 (flanges according to ANSI B16.5 Class 1500 – Raised Face (RF)

DN mm	Class	L mm	D mm	g mm	K mm	z mm	d mm	R mm	SW1 mm	H mm
50	1500	105.0	215.9	92.1	165.1	8	25.4	300	17	150
100	1500	352.6	290.0	193.7	241.3	8	M33	Manual gears	D = 70	–

Other nominal widths and pressure stages on request.

Example of order: Ball valve type K-KFB DN 100 with 4" flange connection according to ANSI B 16.5 Class 600 RF
K-KFB-C 100 52-RF

Parts list K-KFB-C

Pos.	Designation	Material*
10	Body	Steel
20	Flange	Steel
21	Bolt	
30	Ball	Steel, stainless steel
40	Stem	Steel
50	Seal	PTFE
60	O-ring	NBR, FPM
70	Sliding ring	PTFE
80	O-ring	NBR, FPM
90	Stop pin	
130	Hand lever	Steel
150	Stop washer	Steel
160	Bolt	
170	Nut	
	Washer	

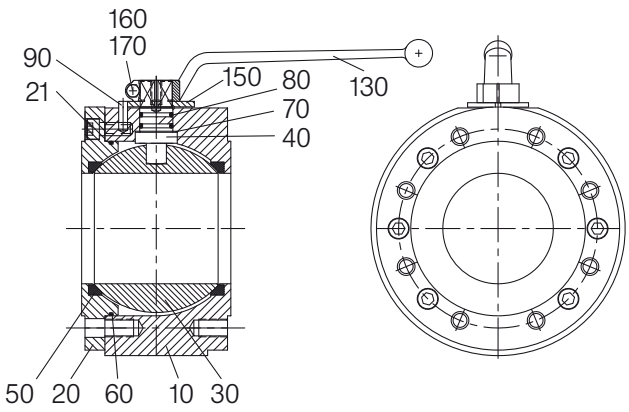

*Standard (can vary according to nominal width), other materials on request.
Due to the design, not all items are used for all nominal widths.

Ball valve (Firesafe) Steel and stainless steel

DN 32 - 250 PN max. 100

Series
02 – male thread on both sides for non-soldering compression fittings with cutting ring DIN 2353 – light-duty series
03 – male thread on both sides for non-soldering compression fittings with cutting ring DIN 2353 – heavy-duty series
05 – male thread on both sides; flat sealing for pipe thread DIN EN ISO 228-1
06 – female thread on both sides DIN EN ISO 228-1
25 – flange PN 10 according to DIN EN 1092-1
26 – flange PN 16 according to DIN EN 1092-1
27 – flange PN 25 according to DIN EN 1092-1
28 – flange PN 40 according to DIN EN 1092-1
29 – flange PN 63 according to DIN EN 1092-1
34 – flange PN 100 according to DIN EN 1092-1
40 – with fixed weld ends
42 – NPT female thread on both sides ANSI/ASME B1.20.1
44 – NPT male thread on both sides ANSI/ASME B1.20.1
50 – flanges according to ANSI/ASME B16.5 Class 150 RF/RTJ
51 – flanges according to ANSI/ASME B16.5 Class 300 RF/RTJ
52 – flanges according to ANSI/ASME B16.5 Class 600 RF/RTJ

Temperature range
Standard: -10°C to +150°C
On request: -50°C to +250°C

Range of use
Liquids: Liquids group 1 and 2 according to DGRL 2014/68/EU Article 13
Gases: Liquids group 1 and 2 according to DGRL 2014/68/EU Article 13
As a matter of principle, resistance to the flow medium must be ensured.

Approvals
DIN EN ISO 10497 2010-06
API 607 sixth edition
TA-Luft

Technical specification
Many of the products within our extensive portfolio can be supplied in a “Firesafe” design conforming to DIN EN ISO 10497 and API 607. The adjacent chart provides an overview of nominal sizes and pressure ratings for the various types of connection. All “Firesafe” ball valves come with TA-Luft certification. A specially designed relief hole in the ball ensures that the body cavity gets depressurised automatically in closed position.

Please feel free to enquire about specifications that exceed the standard conditions of use listed in this data sheet.
As a matter of principle, the safety information provided in the operating and servicing manual must be observed! The operating and servicing manuals as well as the approval certificates can be downloaded at www.von-scheven.de.
We reserve the right to carry out technical modifications.

2.250 EN 08/17

Ball valves (Firesafe)

DIN flange ball valve (Firesafe)

		DN 32	DN 40	DN 50	DN 65	DN 80	DN 100	DN 125	DN 150	DN 200	DN 250
25 – flange according to DIN EN 1092-1	PN	10	10	10	10	10	10	10	10	10	10
26 – flange according to DIN EN 1092-1	PN	16	16	16	16	16	16	16	16	16	16
27 – flange according to DIN EN 1092-1	PN	25	25	25	25	25	25	25	25	25	25
28 – flange according to DIN EN 1092-1	PN	40	40	40	40	40	40	40	40	40	40
29 – flange according to DIN EN 1092-1	PN	63	63	63	63	63	63				
34 – flange according to DIN EN 1092-1	PN	100	100	100	100	100	100				

ANSI flange ball valve (Firesafe)

		DN 32	DN 40	DN 50	DN 65	DN 80	DN 100	DN 125	DN 150	DN 200	DN 250
50 – flanges according to ANSI/ASME B16.5 Class 150 RF/RTJ	PN	20	20	20	20	20	20	20	20	20	20
51 – flanges according to ANSI/ASME B16.5 Class 300 RF/RTJ	PN	40	40	40	40	40	40	40	40	40	40
52 – flanges according to ANSI/ASME B16.5 Class 600 RF/RTJ	PN	100	100	100	100	100	100				

Ball valve with female thread (Firesafe)

		DN 32	DN 40	DN 50	DN 65	DN 80	DN 100	DN 125	DN 150	DN 200	DN 250
06 – female thread on both sides DIN EN ISO 228-1	PN max.	100	100	100	100	100					
42 – NPT female thread on both sides ANSI/ASME B1.20.1	PN max.	100	100	100	100	100					

Ball valve with male thread (Firesafe)

		DN 32	DN 40	DN 50	DN 65	DN 80	DN 100	DN 125	DN 150	DN 200	DN 250
02 – male thread on both sides for non-soldering pipe thread with cutting ring DIN 2353 – light-duty series	PN max.	100	100								
03 – male thread on both sides for non-soldering pipe thread with cutting ring DIN 2353 – heavy-duty series	PN max.	100									
05 – male thread on both sides flat sealing for pipe thread DIN EN ISO 228-1	PN max.	100	100	100							
44 – NPT male thread on both sides ANSI/ASME B1.20.1	PN max.	100	100	100	100	100					

Ball valve with pipe connection (Firesafe)

		DN 32	DN 40	DN 50	DN 65	DN 80	DN 100	DN 125	DN 150	DN 200	DN 250
40 – with fixed weld ends	PN max.	100	100	100	100	100	100	40	40		

Ball valve with pipe sockets KSAE-C, steel

For SAE half flanges

DN 13 - 76 PN max. 400

Series 68 – Connections on both sides for SAE half flanges 3000 psi
69 – Connections on both sides for SAE half flanges 6000 psi

Temperature range Standard: -10°C to +90°C
On request: -50°C to +250°C

Range of use Liquids: Liquids group 1 and 2 according to PED 2014/68/EU Article 13
Gases: Liquids group 1 and 2 according to PED 2014/68/EU Article 13
As a matter of principle, the resistance to the flow medium must be ensured.

Technical specification KSAE-C type ball valve consists of a block resp. welded body with connector screwed in on both sides for SAE half flanges. Up to nominal width DN 25, the stem is fitted from the outside by means of a fitting. Simple replacement of the stem seal is ensured by the fitting used. A stem seal in accordance with the German Technical Instructions on Air Quality Control (TA Luft) is available as standard from nominal width DN 32 and can be used, on request, up to nominal width DN 25 for an additional charge. Actuators can be attached by means of an extension kit. This retrofit requirement is available as standard from DN 32. Up to nominal width DN 25, this must be stated when placing the order.

Please ask separately, where requirements exceed the standard conditions of use listed in this data sheet.
As a matter of principle, the operating and maintenance instructions, in particular the safety instructions must be observed!
Operating and maintenance instructions as well as the approval certificates can be downloaded at www.von-scheven.de.

We reserve the right to carry out technical modifications.

2.300 EN 08/17

Technical data KSAE-C

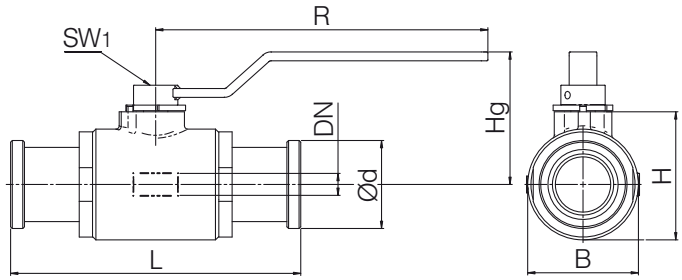

Series 68 (Connections on both sides with pipe sockets for SAE half flanges 3000 psi)

DN mm/Zoll	PN bar	d mm	H mm	B mm	L mm	Hg mm	R mm	SW1 mm
13 1/2"	350	30.2	45	35	170	85	130	10
19 3/4"	350	38.1	55	45	190	95	130	10
25 1"	315	44.4	65	55	210	111	160	10
32 1 1/4"	250	50.8	65	55	223	111	160	10
38 1/2"	200	60.3	104	Ø 90	260	166	250	17
51 2"	200	71.4	104	Ø 90	260	166	250	17
64 2 1/2"	160	84.1	137	Ø133	245	190	300	17
76 3"	160	101.6	208	Ø155	310	260	350	22

Series 69 (Connections on both sides with pipe sockets for SAE half flanges 6000 psi)

DN mm/Zoll	PN bar	d mm	H mm	B mm	L mm	Hg mm	R mm	SW1 mm
13 1/2"	400	31.8	45	35	170	85	130	10
19 3/4"	400	41.3	55	45	190	95	130	10
25 1"	400	47.6	65	55	210	111	160	10
32 1 1/4"	400	54.0	65	55	223	111	160	10
38 1 1/2"	400	63.5	104	Ø90	230	166	300	17
51 2"	400	79.4	104	Ø90	260	166	300	17

Example of order: Type KSAE-C DN type ball valve with connections on both sides with pipe sockets for SAE half flanges 6000 psi
KSAE-C 20 69

Parts list KSAE-C

Pos.	Designation	Material*
10	Body	Steel
20	Fitting	Steel
30	Ball	Steel
40	Seal	POM
50	Stop washer	Steel
60	Stem	Steel
80	O-ring	NBR, FPM
90	Hand lever	Steel, zinc die-casting
100	O-ring	NBR, FPM
130	Sliding ring	PTFE
140	Stop pin	
200	O-ring	NBR, FPM

*Standard (can vary according to nominal width), other materials on request.
Due to the design, not all items are used for all nominal widths.

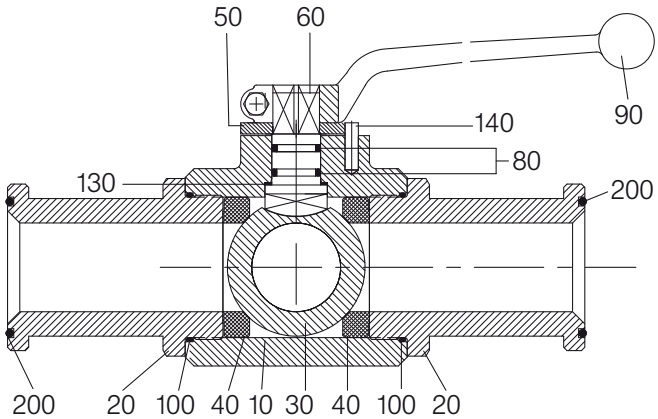

Ball valve KSAE-DR-C, steel

With swivelling SAE flanges

DN 13 - 76 PN max. 400

Series 68 – Swivelling SAE flanges on both sides 3000 psi
69 – Swivelling SAE flanges on both sides 6000 psi

Temperature range Standard: -10°C to +90°C
On request: -50°C to +250°C

Range of use Liquids: Liquids group 1 and 2 according to PED 2014/68/EU Article 13
Gases: Liquids group 1 and 2 according to PED 2014/68/EU Article 13
As a matter of principle, the resistance to the flow medium must be ensured.

Technical specification KSAE-DR-C type ball valve consists of a block resp. forged body with connector with male thread screwed in on both sides including SAE flanges. The flanges are of a swivelling design due to the threaded connection between the SAE flange and the ball valve fitting. Up to nominal width DN 25, the stem is fitted from the outside by means of a fitting. Simple replacement of the stem seal is ensured by the fitting used. A stem seal in accordance with the German Technical Instructions on Air Quality Control (TA Luft) is available as standard from nominal width DN 32 and can be used, on request, up to nominal width DN 25 for an additional charge. Actuators can be attached by means of an extension kit. This retrofit requirement is available as standard from DN 32. Up to nominal width DN 25, this must be stated when placing the order.

Please ask separately, where requirements exceed the standard conditions of use listed in this data sheet.
As a matter of principle, the operating and maintenance instructions, in particular the safety instructions must be observed!
Operating and maintenance instructions as well as the approval certificates can be downloaded at www.von-scheven.de.

We reserve the right to carry out technical modifications.

2.310 EN 08/17

Technical data KSAE-DR-C

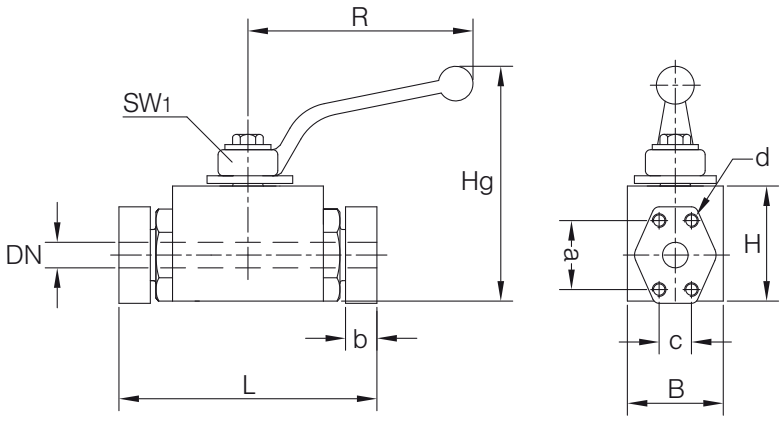

Series 68 (swivelling SAE flanges on both sides 3000 psi)

DN mm/Zoll	PN bar	a mm	b mm	c mm	d mm	B mm	H mm	R mm	L mm	Hg mm	SW1 mm
13 1/2"	350	38.10	16	17.48	M8			On request			
19 3/4"	350	47.63	16	22.23	M10			On request			
25 1"	315	52.37	19	26.19	M10	55	65	160	151	111	10
32 1 1/4"	250	58.72	18	30.18	M10	Ø 76	65	250	151	117	17
38 1 1/2"	200	69.85	20	35.71	M12	Ø 90	104	250	170	121	17
51 2"	200	77.77	20	42.88	M12	Ø100	104	300	190	128	17
64 2 1/2"	160	88.90	20	50.80	M12	Ø133	137	300	175	158	17
76 3"	160	106.38	24	61.93	M16	Ø155	208	350	215	260	22

Note! The pressure rating of the connecting flange can deviate from the nominal pressure rating of the ball valve.

Series 69 (swivelling SAE flanges on both sides 6000 psi)

DN mm/Zoll	PN bar	a mm	b mm	c mm	d mm	B mm	H mm	R mm	L mm	Hg mm	SW1 mm
13 1/2"	400	40.49	16	18.24	M8			On request			
19 3/4"	400	50.80	19	23.80	M10	45	55	130	118	95	10
25 1"	400	57.15	24	27.76	M12	55	65	160	151	111	10
32 1 1/4"	400	66.68	27	31.75	M14	Ø 76	65	250	170	117	17
38 1 1/2"	400	79.38	30	36.50	M16	Ø 90	104	250	204	121	17
51 2"	400	96.82	28	44.45	M20	Ø100	104	300	200	128	17

Note! The pressure rating of the connecting flange can deviate from the nominal pressure rating of the ball valve.

Example of order: Type KSAE-DR-C DN 20 type ball valve with swivelling SAE flanges on both sides 6000 psi
KSAE-DR-C 20 69

Parts list KSAE-DR-C

Pos.	Designation	Material*
10	Body	Steel
20	Fitting	Steel
25	Flange	Steel
30	Ball	Steel
40	Seal	POM
50	Stop washer	Steel
60	Stem	Steel
80	O-ring	NBR, FPM
90	Hand lever	Zinc die-casting , steel
100	O-ring	NBR, FPM
140	Stop pin	

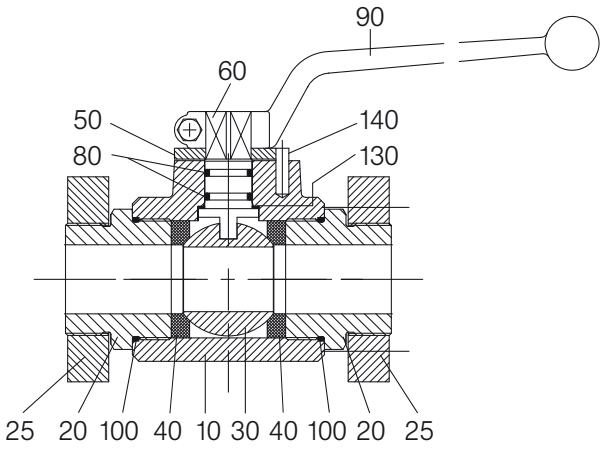

*Standard (can vary according to nominal width), other materials on request.
Due to the design, not all items are used for all nominal widths.

For example:

Chemical installations

No other branch of science is as ubiquitous in daily life as chemistry: pharmaceuticals, plastics, textiles, cosmetics, paints, baking agents, fertilisers, toothpaste, engine lubricants, petrol and CDs. They – and a long list of other products – are all the result of specific chemical processes. Engineers and plant manufacturers offer an extensive range of technologies tailored to the various production methods and processes of relevance to the chemical industry. This includes equipment encompassing high-end components, modules and systems. They ensure that the products brought to life in laboratories around the globe are directed safely to their final destinations – in a manner that is ecologically sound and financially viable. Within these complex structures our ball valves have established a firm place as the ultimate regulatory devices.

Ball valve NSK-AL-C, steel

With detachable weld ends

DN 8 - 50 **PN max. 40**

Series 40 – with detachable weld ends on both sides

Temperature range Standard: -10°C to +150°C
On request: -50°C to +250°C

Range of use Liquids: Liquids group 1 and 2 according to PED 2014/68/EU Article 13
Gases: Liquids group 1 and 2 according to PED 2014/68/EU Article 13
As a matter of principle, the resistance to the flow medium must be ensured.

Technical specification NSK-AL-C type ball valve is designed as a ball valve with detachable weld ends on both sides. Through the flat sealing, detachable weld ends on both sides, a self-contained fitting can be quickly replaced without the line having to be widened. The stem seal is maintenance-free.

Please ask separately, where requirements exceed the standard conditions of use listed in this data sheet.
As a matter of principle, the operating and maintenance instructions, in particular the safety instructions must be observed!
Operating and maintenance instructions as well as the approval certificates can be downloaded at www.von-scheven.de.

We reserve the right to carry out technical modifications.

3.010 EN 08/17

Technical data NSK-AL-C

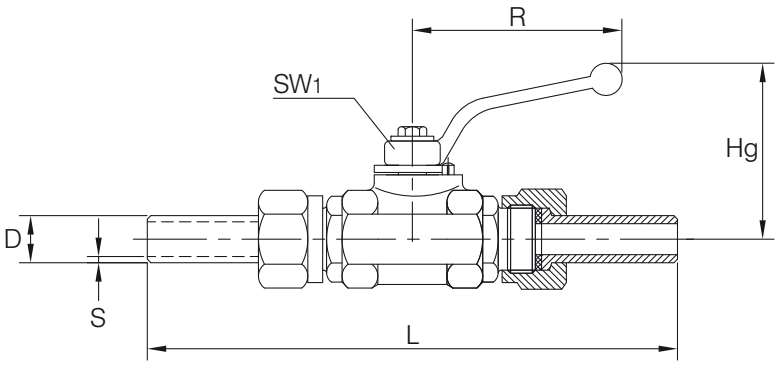

DN mm	PN bar	D* mm	S* mm	L mm	Hg mm	R mm	SW1 mm	Weight kg
8	40	12.2	2.3	181	77	112	10	0.6
10	40	17.2	2.3	181	77	112	10	0.7
15	40	21.3	2.6	198	89	130	10	1.0
20	40	26.9	3.2	207	71	130	10	1.5
25	40	33.7	3.2	226	82	160	10	2.2
32	40	42.4	3.2	253	117	250	17	3.5
40	40	48.3	3.2	354	121	250	17	4.3
50	40	60.3	3.6	400	121	250	17	6.8

*Other pipe dimensions are possible on request.

Example of order: NSK-AL-C DN 15 type ball valve with detachable weld ends on both sides.
NSK-AL-C 15 40

Parts list NSK-AL-C

Pos.	Designation	Material*
10	Body	Forged body
30	Ball	Brass
40	Seal	PTFE
50	Stop washer	Steel
60	Stem	Brass
70	Fitting	Brass
80	O-ring	FPM
90	Hand lever	Zinc die-casting
100	O-ring	FPM
110	Bolt	
120	Washer	
130	O-ring	FPM
140	Stop pin	
180	Fitting	Steel
190	Seal	PTFE
200	Detachable weld end	Steel
210	Union nut	Steel

*Standard (can vary according to nominal width), other materials on request.
Due to the design, not all items are used for all nominal widths.

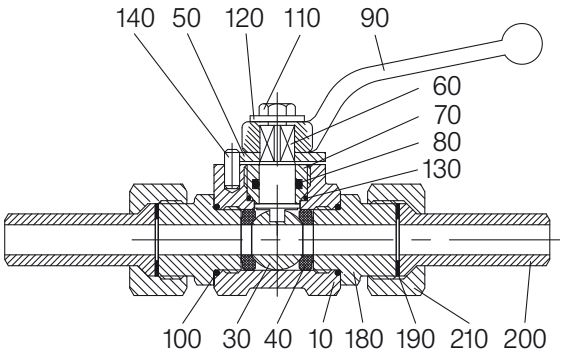

Ball valve as drain valve SEL-C, steel

With detachable weld end and closing cap

DN 8 - 50 PN max. 40

Series 92 – with detachable weld end and closing cap as a drain valve

Temperature range Standard: -10°C to +150°C
On request: -50°C to +250°C

Range of use Liquids: Liquids group 1 and 2 according to PED 2014/68/EU Article 13
Gases: Liquids group 1 and 2 according to PED 2014/68/EU Article 13
As a matter of principle, the resistance to the flow medium must be ensured.

Technical specification The SEL-C ball valve is equipped as a drain ball valve with a one-sided detachable weld end as well as a male thread with closure cap and flat seal. The stem seal is maintenance-free.

Please ask separately, where requirements exceed the standard conditions of use listed in this data sheet.
As a matter of principle, the operating and maintenance instructions, in particular the safety instructions must be observed!
Operating and maintenance instructions as well as the approval certificates can be downloaded at www.von-scheven.de.

We reserve the right to carry out technical modifications.

3.020 EN 08/17

Technical data SEL-C

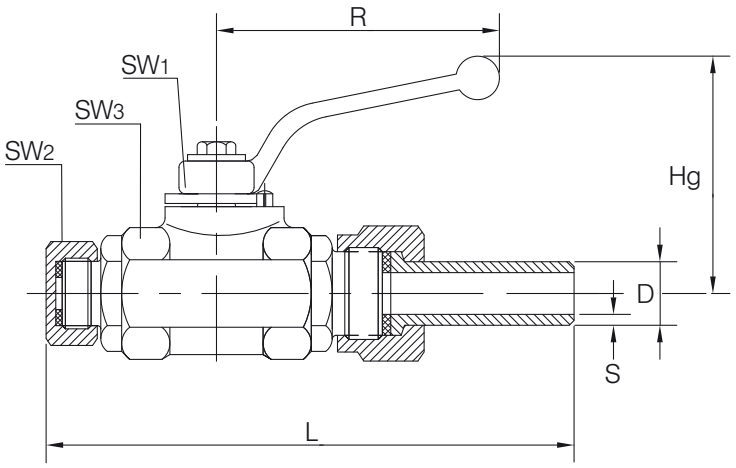

DN mm	PN bar	Cap	D* mm	S* mm	L mm	Hg mm	R mm	SW1 mm	SW2 mm	SW3 mm	Weight kg
8	40	G3/8"	12.2	2.6	135	77	112	10	19	32	0.6
10	40	G1/2"	17.2	2.6	135	77	112	10	23	32	0.7
16	40	G3/4"	21.3	2.6	154	67	130	10	29	36	1.0
20	40	G1"	26.9	3.2	160	71	130	10	36	46	1.5
25	40	G1 1/4"	33.7	3.2	181	82	160	10	44	55	2.2
25	40	G1 1/4"	42.4	3.2	188	82	160	10	44	55	3.5
40	40	G2"	48.3	3.2	267	121	250	17	65	Ø90	4.5
50	40	G2"	60.3	3.2	290	121	250	17	65	Ø90	6.8

*Other pipe dimensions are possible on request.

Example of order: SEL-C type ball valve made of steel, DN 20 with detachable weld end and closure cap as a drain valve
SEL-C 25 92

Parts list SEL-C

Pos.	Designation	Material*
10	Body	Forged steel
20	Fitting	Steel
30	Ball	Brass
40	Seal	PTFE
50	Stop washer	
60	Stem	Brass
70	Fitting	Brass
80	O-ring	FPM
90	Hand lever	Zinc die-casting
100	O-ring	FPM
110	Bolt	
120	Washer	
130	O-ring	FPM
140	Stop pin	
160	Washer	PTFE
170	Closing cap	
180	Fitting	Steel
190	Seal	PTFE
200	Weld end	Steel
210	Union nut	

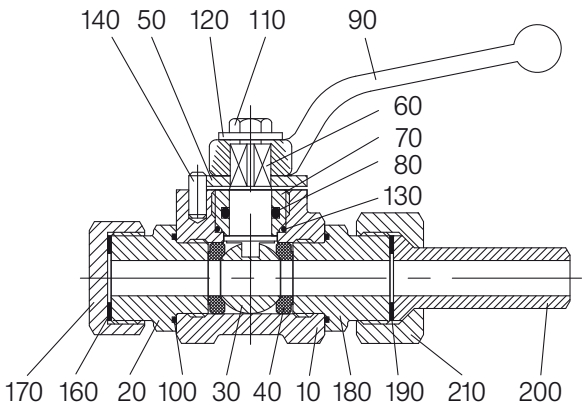

*Standard (can vary according to nominal width), other materials on request.
Due to the design, not all items are used for all nominal widths.

Ball valve NSK-AF-C and HSK-AF-C, steel

With fixed weld ends

DN 8 - 50 **PN max. 40 / PN max. 400**

Series 40 – with fixed weld ends: up to PN 40 – NSK-AF-C
up to PN 400 – HSK-AF-C

Temperature range Standard: -10°C to +150°C
On request: -50°C to +250°C

Range of use Liquids: Liquids group 1 and 2 according to PED 2014/68/EU Article 13
Gases: Liquids group 1 and 2 according to PED 2014/68/EU Article 13
As a matter of principle, the resistance to the flow medium must be ensured.

Technical specification The NSK-AF-C and HKS-AF-C ball valves are equipped with fixed weld ends on both sides. The stem seal is maintenance-free.

Please ask separately, where requirements exceed the standard conditions of use listed in this data sheet.
As a matter of principle, the operating and maintenance instructions, in particular the safety instructions must be observed!
Operating and maintenance instructions as well as the approval certificates can be downloaded at www.von-scheven.de.

We reserve the right to carry out technical modifications.

3.030 EN 08/17

Technical data NSK-AF-C HSK-AF-C

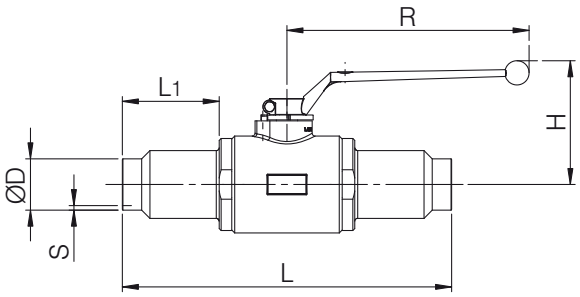

DN mm	NSK-AF-C PN bar	HSK-AF-C PN bar	L mm	L1 mm	D* mm	S* mm	H mm	R mm	Weight kg
8	40	400	262	100	13.5	2.3	77	112	0.7
10	40	400	262	100	17.2	2.3	77	112	0.8
15	40	400	279	100	21.3	2.6	67	130	1.1
20	40	400	284	100	26.9	3.2	71	130	1.6
25	40	400	298	100	33.7	3.2	82	160	2.3
32	40	400	309	100	42.4	3.2	117	250	4.5
40	40	400	276	80	48.3	3.2	121	250	4.2
50	40	400	294	80	60.3	3.6	128	250	8.5

*Dimension relates to PN 40. Other dimensions are possible on request.

Example of order: NSK-AF-C type ball valve made of steel, DN 25 PN 40 with fixed weld ends
NSK-AF-C 25 40

Parts list		**NSK-AF-C**	**HSK-AF-C**
Pos.	Designation	Material*	Material*
10	Body	Steel	Steel
20	Fitting	Steel	Steel
30	Ball	Brass	Steel
40	Seal	PTFE	POM
50	Stop washer	Steel	Steel
60	Stem	Steel	Steel
80	O-ring	NBR/FPM	NBR/FPM
90	Hand lever	Zinc die-casting	Zinc die-casting
100	O-ring	NBR/FPM	NBR/FPM
110	Bolt		
120	Washer		
130	Sliding ring	PTFE	PTFE
	O-ring	NBR/FPM	NBR/FPM
140	Stop pin		

*Standard (can vary according to nominal width), other materials on request.
Due to the design, not all items are used for all nominal widths.

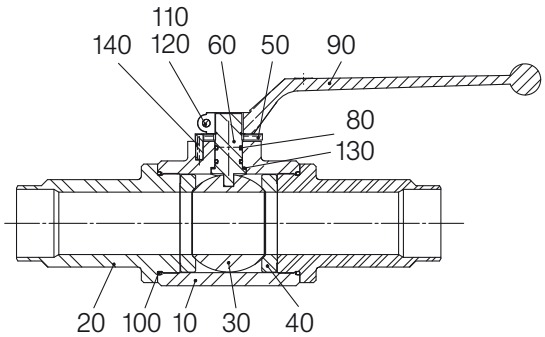

Ball valve NB-AF-D, HB-AF-D, NSK-AF-D, HSK-AF-D, stainless steel

With fixed weld ends

DN 8 – 50 PN max. 40 / PN max. 400

Series 40 – with fixed weld ends

Temperature range Standard: -10°C to +150°C
On request: -50°C to +250°C

Range of use Liquids: Liquids group 1 and 2 according to PED 2014/68/EU Article 13
Gases: Liquids group 1 and 2 according to PED 2014/68/EU Article 13
As a matter of principle, the resistance to the flow medium must be ensured.

Technical specification Ball valves NB-AF-D, HB-AF-D, NSK-AF-D and HSK-AF-D are equipped as ball valves with a fixed weld end on both sides. The stem seal is maintenance-free.

Please ask separately, where requirements exceed the standard conditions of use listed in this data sheet.
As a matter of principle, the operating and maintenance instructions, in particular the safety instructions must be observed!
Operating and maintenance instructions as well as the approval certificates can be downloaded at www.von-scheven.de.

We reserve the right to carry out technical modifications.

3.040 EN 08/17

Technical data

DN 8 to DN 25

PN max. 40 bar NB-AF-D

PN max. 400 bar HB-AF-D

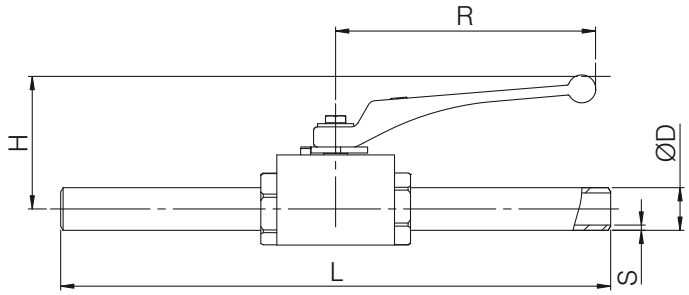

DN mm	NB-AF-D PN bar	HB-AF-D PN bar	L mm	D * mm	S * mm	H mm	R mm	Weight kg
8	40	400	262	13.05	2.3	77	112	0.7
10	40	400	262	17.20	2.3	77	112	0.8
15	40	400	279	21.30	2.6	67	130	1.1
20	40	400	284	26.90	3.2	71	130	1.6
25	40	400	298	33.70	3.2	82	160	2.3

*Dimension relates to PN 40. Other dimensions are possible on request.

DN 32 to DN 50

PN max. 40 bar NSK-AF-D

PN max. 400 bar HSK-AF-D

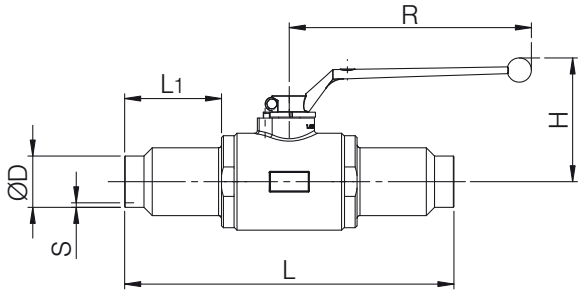

DN mm	NSK-AF-D PN bar	HSK-AF-D PN bar	L mm	D * mm	S * mm	H mm	R mm	Weight kg
32	40	400	309	42.4	3.2	117	250	4.5
40	40	400	276	48.3	3.2	121	250	4.2
50	40	400	294	60.3	3.6	128	250	8.5

*Dimension relates to PN 40. Other dimensions are possible on request.

Example of order: Type HB-AF-D ball valve of stainless steel, DN 25 with fixed weld ends
HB-AF-D 25 40

Parts list

Pos.	Designation	NB-AF-D NSK-AF-D Material*	HB-AF-D HSK-AF-D Material*
10	Body	Stainless steel	Stainless steel
20	Fitting	Stainless steel	Stainless steel
30	Ball	Stainless steel	Stainless steel
40	Seal	PTFE	POM
50	Stop washer	Stainless steel	Stainless steel
60	Stem	Stainless steel	Stainless steel
80	O-ring	FPM	NBR
90	Hand lever	Zinc die-casting	Zinc die-casting
100	O-ring	FPM	NBR
110	Bolt		
120	Washer		
130	Sliding ring	PTFE	PTFE
140	Stop pin		

*Standard (can vary according to nominal width), other materials on request.
Due to the design, not all items are used for all nominal widths.

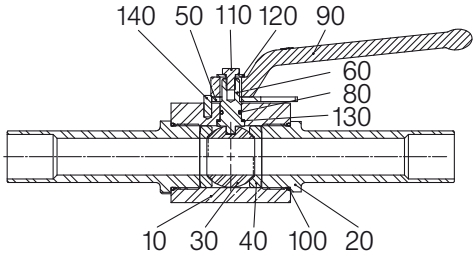

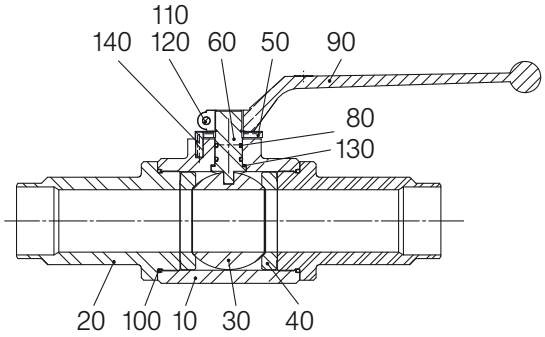

Ball valve as drain valve SEF-C, steel

With fixed weld end and closure cap

DN 8 - 50 PN max. 40

Series 92 – with fixed weld end and closing cap as a drain valve

Temperature range Standard: -10°C to +150°C
On request: -50°C to +250°C

Range of use Liquids: Liquids group 1 and 2 according to PED 2014/68/EU Article 13
Gases: Liquids group 1 and 2 according to PED 2014/68/EU Article 13
As a matter of principle, the resistance to the flow medium must be ensured.

Technical specification The SEF-C ball valve is equipped as a drain ball valve with a one-sided fixed weld end as well as a male thread with closure cap and flat seal. The stem seal is maintenance-free.

Please ask separately, where requirements exceed the standard conditions of use listed in this data sheet.
As a matter of principle, the operating and maintenance instructions, in particular the safety instructions must be observed!
Operating and maintenance instructions as well as the approval certificates can be downloaded at www.von-scheven.de.

We reserve the right to carry out technical modifications.

3.050 EN 08/17

Technical data SEF-C

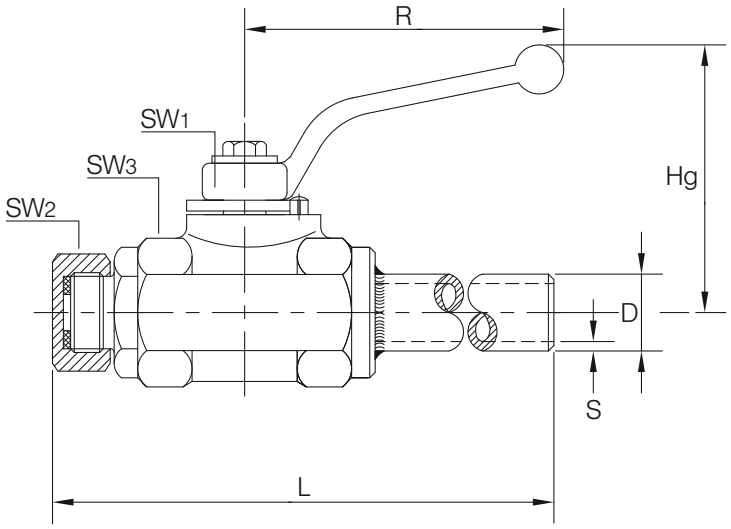

DN mm	PN bar	Cap	D* mm	S* mm	L mm	Hg mm	R mm	SW1 mm	SW2 mm	SW3 mm	Weight kg
8	40	G3/8"	12.2	2.3	267	77	112	10	19	32	0.6
10	40	G1/2"	17.2	2.3	275	77	112	10	23	32	0.7
16	40	G3/4"	21.3	2.6	283	67	130	10	29	46	1.0
20	40	G1"	26.9	3.2	293	71	130	10	36	46	1.5
25	40	G1 1/4"	33.7	3.2	310	82	160	10	44	55	2.2
32	40	G1 1/4"	42.4	3.2	310	82	160	17	44	55	3.5
40	40	G2"	48.3	3.2	350	121	250	17	65	Ø90	4.5
50	40	G2"	60.3	3.6	350	121	250	17	65	Ø90	6.3

*Other pipe dimensions are possible on request.

Example of order: SEF-C type ball valve made of steel, DN 25 with fixed weld end and closure cap as a drain valve
SEF-C 25 92

Parts list SEF-C

Pos.	Designation	Material*
10	Body	Forged steel
20	Fitting	Steel
30	Ball	Brass
40	Seal	PTFE
50	Stop washer	
60	Stem	Brass
70	Fitting	Brass
80	O-ring	FPM
90	Hand lever	Zinc die-casting
100	O-ring	FPM
110	Bolt	
120	Washer	
130	O-ring	FPM
140	Stop pin	
160	Washer	PTFE
170	closing cap	

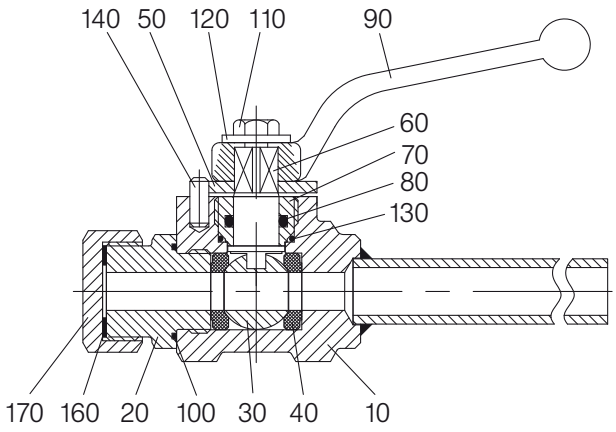

*Standard (can vary according to nominal width), other materials on request.
Due to the design, not all items are used for all nominal widths.

Ball valve VSK-C, steel

With weld ends, fully welded

DN 10 - 300 **PN max. 40**

Series 40 – with weld ends, fully welded

Temperature range Standard: Operating pressure is dependent on the operating temperature
PN 16 = -40 °C to +165 °C
PN 25 = -40 °C to +140 °C
PN 40 = -40 °C to +90 °C
Other temperatures on request.

Range of use The ball valve is suitable for all non-corrosive media such as, e.g. district heating, heating water, cold water for air-conditioning, oil and compressed air.

Technical specification The complete valve body and weld ends are welded together. There are no potentially leaking flanged or bolted connections on the valve body. The blowout-proof stem is externally sealed with two O-ring seals and a graphite reinforced PTFE washer pressed on by the media pressure. System safety is ensured by the possibility of replacing the upper O-ring seal up to DN 50 and both O-ring seals from DN 65 to DN 250.

Due to the design, not all items are used for all nominal widths.
Please ask separately, where requirements exceed the standard conditions of use listed in this data sheet.
As a matter of principle, the operating and maintenance instructions, in particular the safety instructions must be observed!
Operating and maintenance instructions as well as the approval certificates can be downloaded at www.von-scheven.de.

We reserve the right to carry out technical modifications.

3.100 EN 08/17

Technical data VSK-C

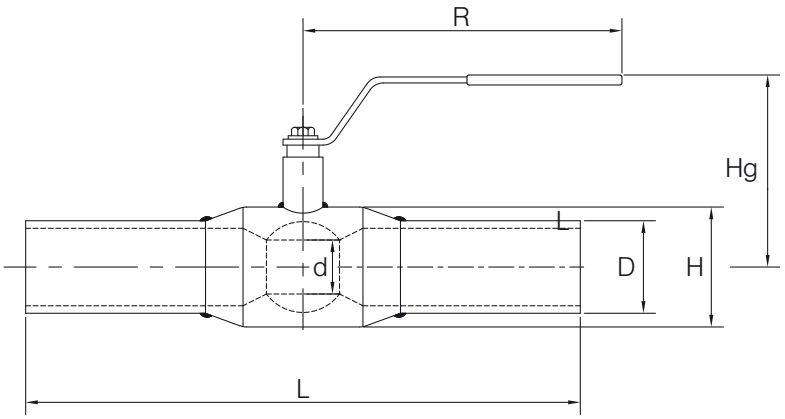

DN mm	PN bar	d mm	D mm	H mm	Hg mm	R mm	L mm	Weight kg
10	40	10	17.2	33.7	98	145	230	0.5
15	40	10	21.3	33.7	98	145	230	0.5
20	40	15	26.9	42.4	103	145	230	0.7
25	40	20	33.7	48.3	118	145	230	1.0
32	40	25	42.4	60.3	121	145	260	1.4
40	40	32	48.3	70.0	120	190	260	1.8
50	40	40	60.3	88.9	127	190	300	2.6
65	25	50	76.1	101.6	159	280	300	4.4
80	25	65	88.9	121.0	171	280	300	5.6
100	25	80	114.3	146.0	218	280	325	8.4
125	25	100	139.7	177.8	252	400	325	13.4
150	25	125	168.3	219.1	272	600	350	18.0
200	25	150	219.1	273.0	300	900	390	36.3
250	25	200	273.0	355.6	345	1200	520	72.0
300	25	250	323.9	457.0	–	–	530	107.0

Example of order: VSK-C DN 25 type ball valves with weld ends, fully welded, steel
VSK-C 25 40

Ball valve VSK-D, stainless steel

With weld ends, fully welded

DN 10 - 250 PN max. 40

Series 40 – with weld ends, fully welded

Temperature range Standard: Operating pressure is dependent on the operating temperature
PN 16 = -40 °C to +165 °C
PN 25 = -40 °C to +140 °C
PN 40 = -40 °C to +90 °C
Other temperatures on request .

Range of use The ball valve is suitable for all non-corrosive media such as, e.g. district heating, heating water, cold water for air-conditioning, oil and compressed air.

Technical specification The complete valve body and weld ends are welded together. There are no potentially leaking flanged or bolted connections on the valve body. The blowout-proof stem is externally sealed with two O-ring seals and a graphite reinforced PTFE washer pressed on by the media pressure. System safety is ensured by the possibility of replacing the upper O-ring seal up to DN 50 and both O-ring seals from DN 65 to DN 250.

Due to the design, not all items are used for all nominal widths.
Please ask separately, where requirements exceed the standard conditions of use listed in this data sheet.
As a matter of principle, the operating and maintenance instructions, in particular the safety instructions must be observed!
Operating and maintenance instructions as well as the approval certificates can be downloaded at www.von-scheven.de.

We reserve the right to carry out technical modifications.

3.110 EN 08/17

Technical data VSK-D

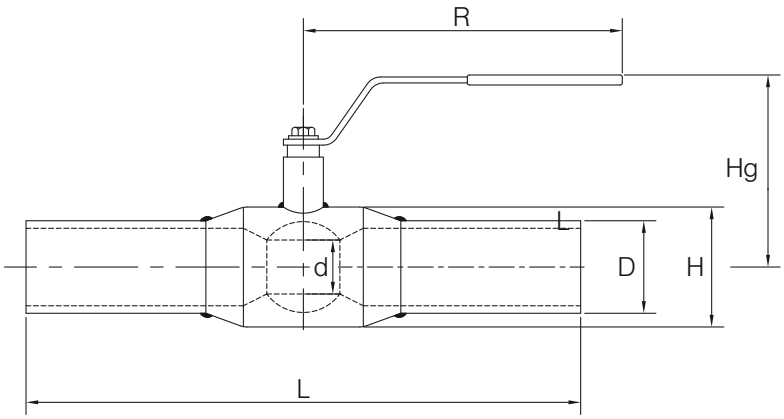

DN mm	PN bar	d mm	D mm	H mm	Hg mm	R mm	L mm	Weight kg
10	40	10	17.2	33.7	98	145	230	0.50
15	40	10	21.3	33.7	98	145	230	0.50
20	40	15	26.9	42.4	103	145	230	0.65
25	40	20	33.7	48.3	112	145	230	0.85
32	40	25	42.4	60.3	116	145	260	1.13
40	40	32	48.3	76.1	111	190	260	1.82
50	40	40	60.3	88.9	118	190	300	2.60
65	25	50	76.1	114.3	150	280	300	3.98
80	25	65	88.9	139.7	160	280	300	5.50
100	25	80	114.3	168.3	175	280	325	8.00
125	16	100	139.7	177.8	220	400	325	13.00
150	16	125	168.3	219.1	240	600	350	17.00
200	16	150	219.1	273.0	271	900	390	38.00
250	16	200	273.0	355.6	345	1200	520	70.00

Example of order: VSK-D DN 25 type ball valve with weld ends fully welded, stainless steel
VSK-D 25 40

For example:

Hydraulic control blocks

Boasting a weight of 800 tons, one of the flagships of the mobile hydraulics industry must surely be the heavy-duty excavator that reaches an impressive 16 metres in height when fully outstretched. Based in Canada and operating around the clock, it transfers 8,000 tons of oil sand per hour to a fleet of dumper trucks. Handling such enormous volumes requires high-performance hydraulics and extremely sensitive control components such as hydraulic blocks. These control blocks regulate the pressure, volume and flow of the such fluids and are used in the majority of such systems. Our manifold ball valves are used to diverse, shut off or release the flow of hydraulic fluids.

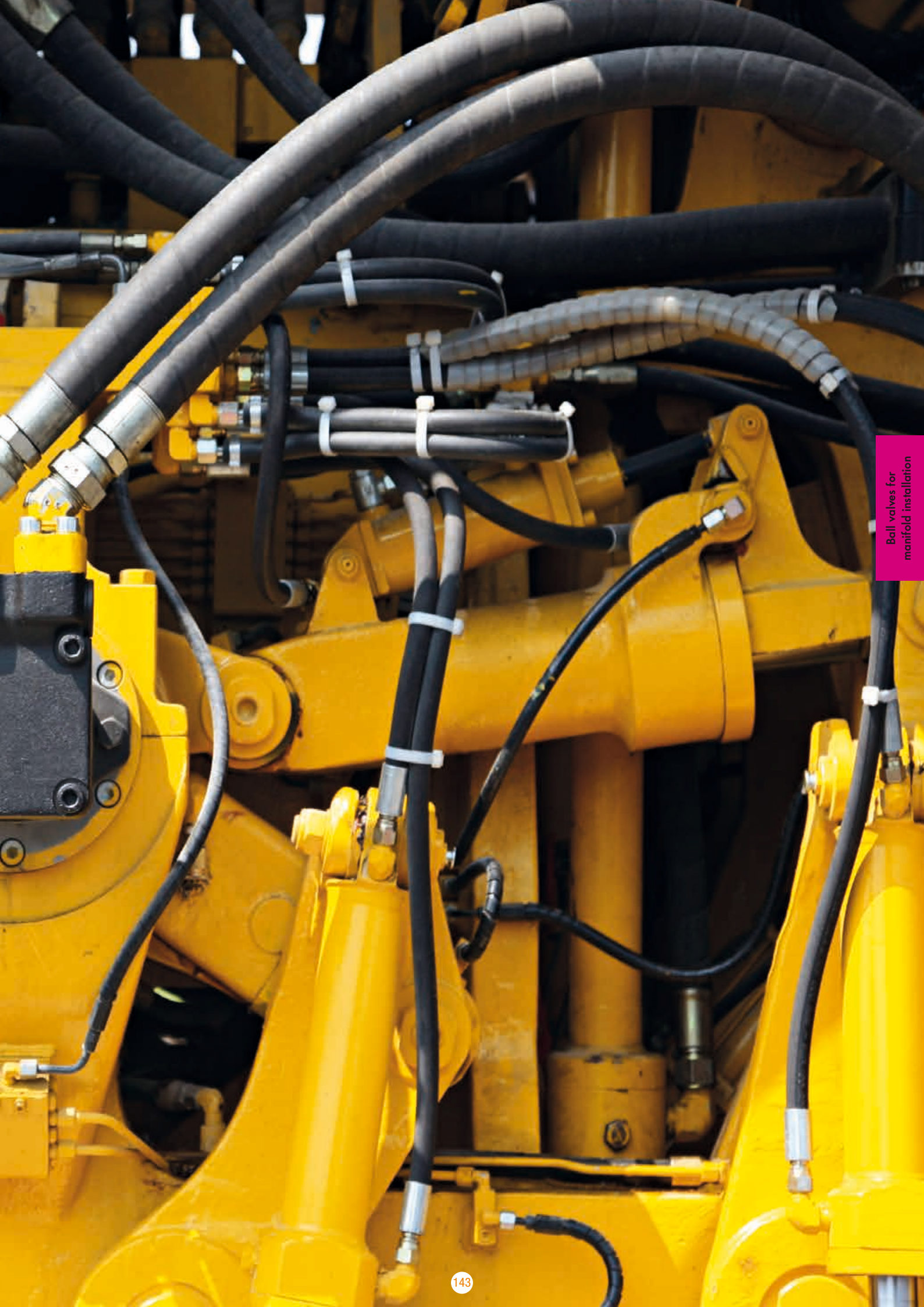

2/2-way high-pressure block ball valve HBP-C, HBP-D, steel and stainless steel

For manifold installation

DN 6 - 25 **PN max. 500**

Also available as a stainless steel ball valve.
2/2-way manifold ball valves DN 32 to DN 50 on request

Temperature range
Standard: -10°C to +90°C
On request: -50°C to +250°C

Range of use
Liquids: Liquids group 1 and 2 according to PED 2014/68/EU Article 13
Gases: Liquids group 1 and 2 according to PED 2014/68/EU Article 13
As a matter of principle, the resistance to the flow medium must be ensured.

Technical specification
The HBP-C type ball valve has been specially developed for installation on control blocks. The need to use hoses or piping can be avoided through direct flanging on to the control block.
Actuators can be attached by means of an extension kit. This retrofit requirement must be specified when placing the order (additional charge).

Please ask separately, where requirements exceed the standard conditions of use listed in this data sheet,
As a matter of principle, the operating and maintenance instructions, in particular the safety instructions must be observed!
Operating and maintenance instructions as well as the approval certificates can be downloaded at www.von-scheven.de.

We reserve the right to carry out technical modifications.

3.200 EN 08/17

Technical data HBP-C, HBP-D

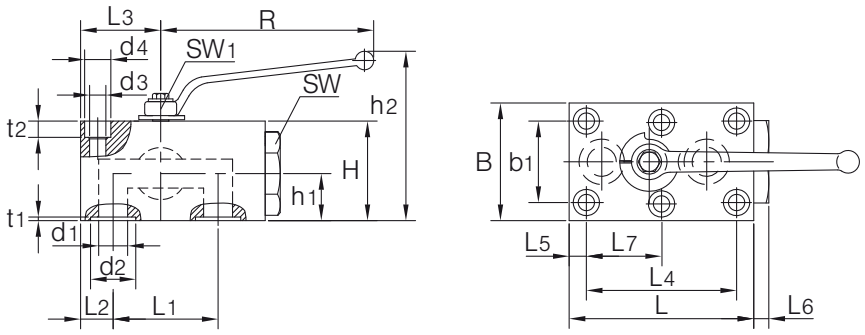

DN mm	PN bar	L1 mm	L2 mm	L3 mm	L4 mm	L5 mm	L6 mm	L7 mm	L mm	b1 mm	B mm	H mm	h1 mm	h2 mm
6	500	35	8.5	24.5	35	8.5	5	–	57	27	40	40	20*	72
10	500	44	10.0	30.0	55	7.5	5	27.5	76	40	55	45	20	97
16	500	58	18.0	44.3	83	9.5	10	41.5	102	45	65	55	26	95
20	320	69	20.0	51.0	97	10.0	19	48.5	117	51	70	70	40	110
25	320	81	24.0	60.0	115	10.0	7	57.5	135	60	80	80	46	126

DN mm	t1 mm	t2 mm	d1 mm	d2 mm	d3 mm	d4 mm	SW1 mm	SW mm	R mm	Weight kg
6	1.8	7	6.0	12	6.5	11.0	7	22	76	0.7
10	1.8	9	9.5	15	9.0	13.5	10	27	112	1.3
16	2.0	9	16.0	25	9.0	14.5	10	36	130	2.4
20	2.4	11	20.0	30	11.0	18.0	10	41	130	4.1
25	2.4	11	25.0	35	11.0	18.0	10	50	160	6.3

*For stainless steel: 22.5 mm

Example of order: HBP-C 25 type ball valve made of steel, DN25 for 2-way manifold installation
HBP-C 25

Parts list		**HBP-C**	**HBP-D**
Pos.	Designation	Material*	Material*
10	Body	Steel	Stainless steel
20	Fitting	Steel	Stainless steel
30	Ball	Steel	Stainless steel
40	Seal	POM	POM
50	Stop washer	Steel	Stainless steel
60	Stem	Steel	Stainless steel
70	Fitting	Brass	Stainless steel
80	O-ring	NBR	NBR
90	Hand lever	Zinc die-casting	Zinc die-casting
100	O-ring	NBR	NBR
110	Bolt		
120	Washer		
130	O-ring	NBR	PTFE
140	Stop pin		
150	O-ring	NBR	NBR
160	O-ring	NBR	NBR

*Standard (can vary according to nominal width), other materials on request.
Due to the design, not all items are used for all nominal widths.

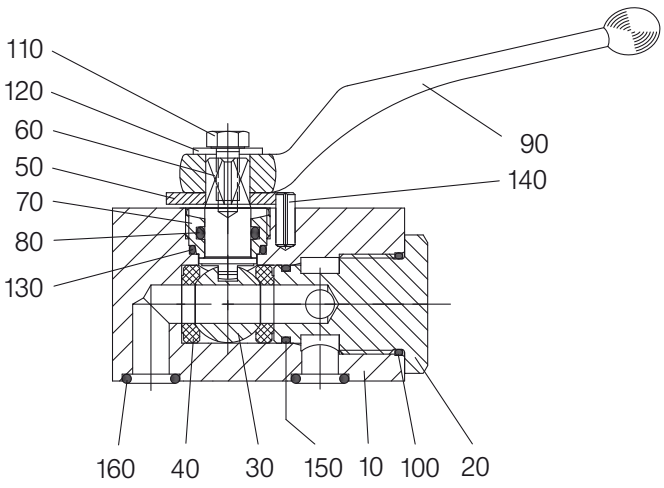

3/2-way high-pressure block ball valve HBPD-C, HBPD-D, steel and stainless steel

For manifold installation

DN 6 - 25 **PN max. 500**

3/2-way manifold ball valves DN 32 to DN 50 on request.

Temperature range

Standard: -10°C to +90°C
On request: -50°C to +250°C

Range of use

Liquids: Liquids group 1 and 2 according to PED 2014/68/EU Article 13
Gases: Liquids group 1 and 2 according to PED 2014/68/EU Article 13
As a matter of principle, the resistance to the flow medium must be ensured.

Technical specification

The HBPD-C type three-way changeover ball valve has been specially developed for installation on control blocks. The need to use hoses or piping can be avoided through direct flanging on to the control block. When using this ball, please note that, concerning the seal, this is a changeover ball valve. Pressure inlet must therefore in the centre. Actuators can be attached by means of an extension kit. This retrofit requirement must be specified when placing the order (additional charge).

Please ask separately, where requirements exceed the standard conditions of use listed in this data sheet,
As a matter of principle, the operating and maintenance instructions, in particular the safety instructions must be observed!
Operating and maintenance instructions as well as the approval certificates can be downloaded at www.von-scheven.de.

We reserve the right to carry out technical modifications.

3.210 EN 08/17

Technical data HBPD-C, HBPD-D

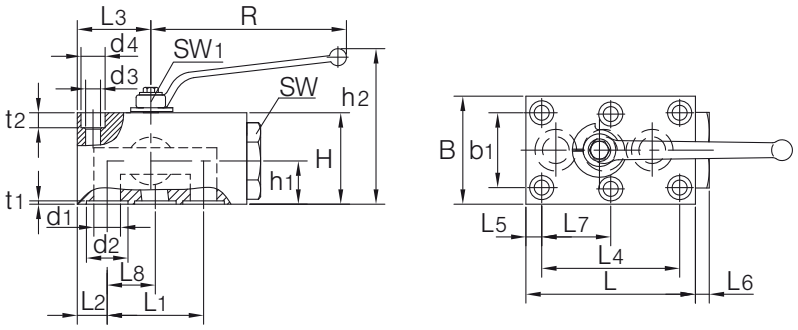

DN mm	PN bar	L1 mm	L2 mm	L3 mm	L4 mm	L5 mm	L6 mm	L7 mm	L8 mm	L mm	b1 mm	B mm	H mm	h1 mm
6	500	35	8.5	24.5	35	8.5	5	–	17.5	57	27	40	40	20*
10	500	44	10.0	30.0	55	7.5	5	27.5	22.0	76	40	55	45	20
16	500	58	18.0	44.3	83	9.5	10	41.5	29.0	102	45	65	55	26
20	320	69	20.0	51.0	97	10.0	19	48.5	34.5	117	51	70	70	40
25	320	81	24.0	60.0	115	10.0	7	57.5	40.5	135	60	80	80	46

DN mm	h2 mm	t1 mm	t2 mm	d1 mm	d2 mm	d3 mm	d4 mm	SW1 mm	SW mm	R mm	Weight kg
6	72	1.8	7	6.0	12	6.5	11.0	7	22	76	0.7
10	97	1.8	9	9.5	15	9.0	13.5	10	27	112	1.3
16	95	2.0	9	16.0	25	9.0	14.5	10	36	130	2.4
20	110	2.4	11	20.0	30	11.0	18.0	10	41	130	4.1
25	126	2.4	11	25.0	35	11.0	18.0	10	50	160	6.3

*For stainless steel: 22.5 mm

Example of order: HBPD-C 25 type ball valve made of steel, DN25 for 3-way manifold installation
HBPD-C 25

Parts list		**HBPD-C**	**HBPD-D**
Pos.	Designation	Material*	Material*
10	Body	Steel	Stainless steel
20	Fitting	Steel	Stainless steel
30	Ball	Steel	Stainless steel
40	Seal	POM	POM
50	Stop washer		
60	Stem	Steel	Stainless steel
70	Fitting	Brass	Stainless steel
80	O-ring	NBR	NBR
90	Hand lever	Zinc die-casting	Zinc die-casting
100	O-ring	NBR	NBR
110	Bolt		
120	Washer		
130	O-ring	NBR	PTFE
140	Stop pin		
150	O-ring	NBR	NBR
160	O-Ring	NBR	NBR

*Standard (can vary according to nominal width), other materials on request.
Due to the design, not all items are used for all nominal widths.

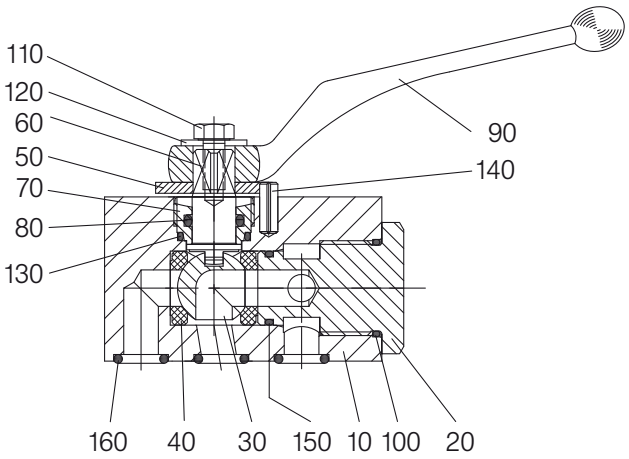

4/2-way high-pressure block ball valve HBVP-C, HBVP-D, steel

For manifold installation

DN 6 - 25 **PN max. 500**

Also available in stainless steel.

Temperature range
Standard: -10°C to +90°C
On request: -50°C to +250°C

Range of use
Liquids: Liquids group 1 and 2 according to PED 2014/68/EU Article 13
Gases: Liquids group 1 and 2 according to PED 2014/68/EU Article 13
As a matter of principle, the resistance to the flow medium must be ensured.

Technical specification
The HBVP-C type ball valve has been specially developed for installation on control blocks. The need to use hoses or piping can be avoided through direct flanging on to the control block.
Actuators can be attached by means of an assembly kit. This retrofitment requirement must be specified when placing the order (additional charge).

Dimensions and parts list on request.

Please ask separately, where requirements exceed the standard conditions of use listed in this data sheet,
As a matter of principle, the operating and maintenance instructions, in particular the safety instructions must be observed!
Operating and maintenance instructions as well as the approval certificates can be downloaded at www.von-scheven.de.

We reserve the right to carry out technical modifications.

3.220 EN 08/17

For example:

Forging technology

Among all the metalworking processes, hand forging is the oldest and perhaps most fascinating of all. Anvils, water power hammers and corporal strength, however, have long since been replaced by huge forging presses and equally impressive processing equipment. Here, tremendous forces of 120 MN have to be channelled with pinpoint precision to manipulate metal items weighing as much as 200 tons. It goes without saying that the hydraulics involved in this process also have to be up for the task. We are proud of the fact that our ball valves have a role to perform in this magnificent play of forces.

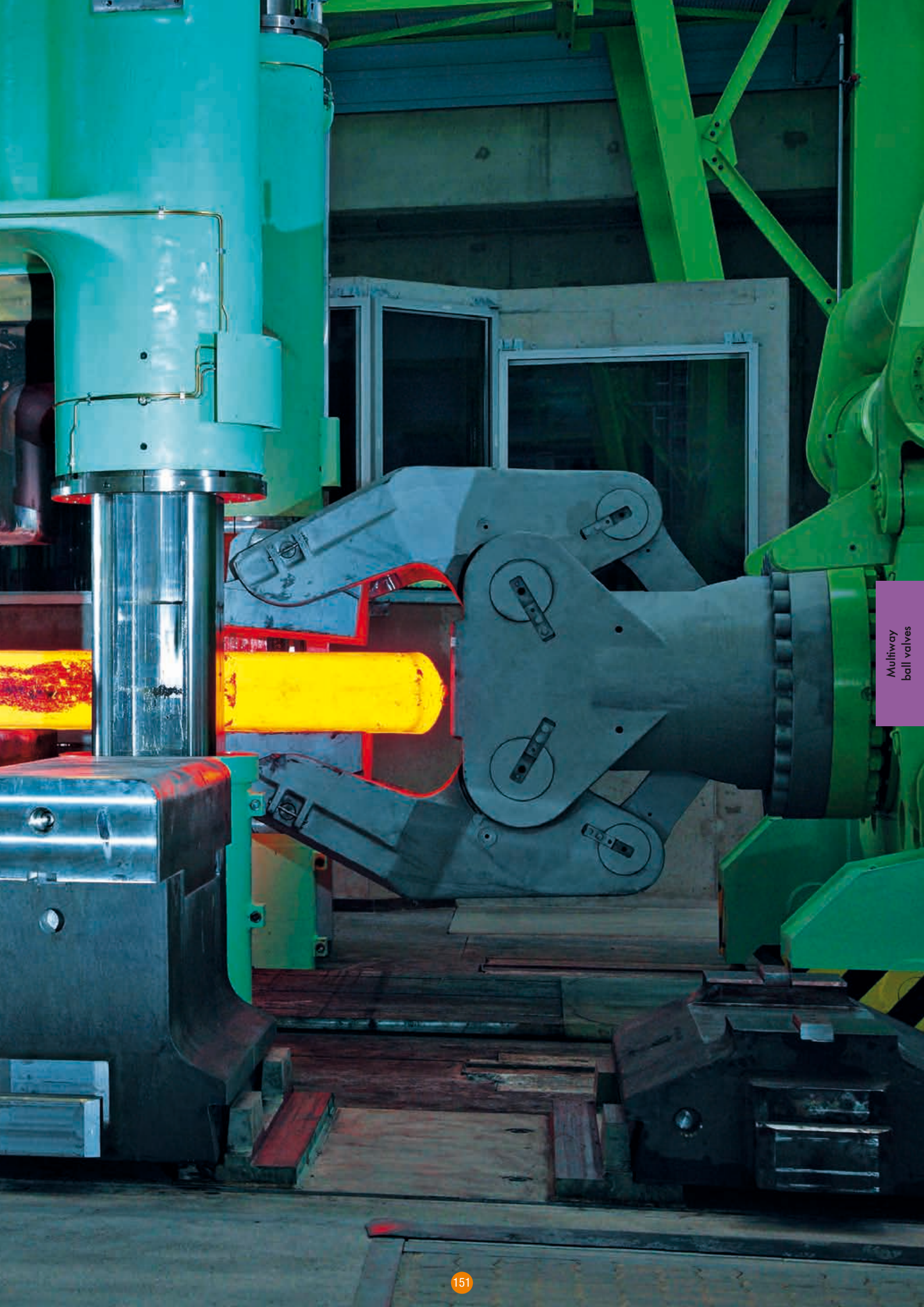

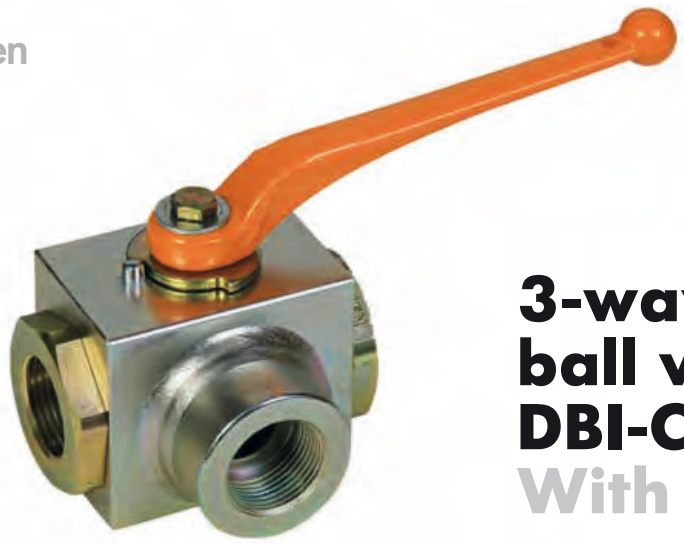

3-way changeover ball valve DBI-C, steel

With female thread

DN 4 - 50 PN to 500

Series 06 – female thread on all sides DIN ISO 228-1

Temperature range Standard: -10°C to +90°C
On request: -50°C to +250°C

Range of use Liquids: Liquids group 1 and 2 according to PED 2014/68/EU Article 13
Gases: Liquids group 1 and 2 according to PED 2014/68/EU Article 13
As a matter of principle, the resistance to the flow medium must be ensured.

Technical specification Up to DN 25, the ball valve type DBI-C consists of a block body, from DN 32 it consists of a forged body with connector screwed in on both sides.
When using this ball valve, please note that, concerning the seal, this is a changeover ball valve. Pressure inlet must therefore be in the centre. Actuators can be attached by means of an extension kit.
This retrofit requirement must be specified when placing the order (additional charge).

Please ask separately, where requirements exceed the standard conditions of use listed in this data sheet.
As a matter of principle, the operating and maintenance instructions, in particular the safety instructions must be observed!
Operating and maintenance instructions as well as the approval certificates can be downloaded at www.von-scheven.de.

We reserve the right to carry out technical modifications.

4.010 EN 08/17

Technical data DBI-C

Ball holes

L-form **T-form**

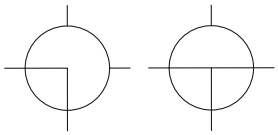

Series 06

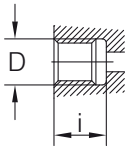

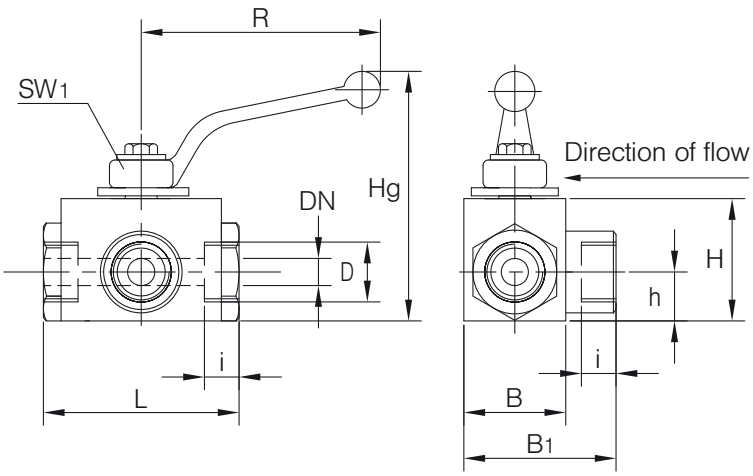

Series 06 (pipe female thread DIN ISO 228-1)

DN mm	PN bar	D	i mm	L mm	B mm	B1 mm	H mm	h mm	Hg mm	R mm	SW1 mm	Weight kg
4	500	G 1/8"	11.0	50	25	43	30	12.5	61	76	7	0.4
6	500	G 1/4"	12.5	50	25	43	30	12.5	61	76	7	0.4
10	500	G 3/8"	12.5	60	30	48	40	15.0	92	112	10	0.6
15	500	G 1/2"	15.0	75	35	55	45	18.0	85	130	10	0.9
20	320	G 3/4"	18.0	80	45	69	55	25.0	95	130	10	1.2
25	320	G 1"	20.0	90	55	81	65	30.0	111	160	10	2.2
32	160	G 1 1/4"	22.0	110	Ø 76	108	93	38.0	155	250	17	3.5
40	160	G 1 1/2"	23.0	120	Ø 90	135	104	45.0	166	250	17	4.8
50	160	G 2"	26.0	140	Ø100	120	116	50.0	178	250	17	5.9

Example of order: Ball valve type DBI-C made of steel, DN 15 with female thread DIN ISO 228-1 with L-ball (please state ball hole form)
DBI-C 15 06-L

Parts list DBI-C

Pos.	Designation	Material*
10	Body	Steel
20	Fitting	Steel
30	Ball	Steel
40	Seal	POM
50	Stop washer	
60	Stem	Steel
70	Fitting	Brass
80	O-ring	NBR
90	Hand lever	Zinc die-casting
100	O-ring	NBR
110	Bolt	
120	Washer	
130	O-ring	NBR
140	Stop pin	

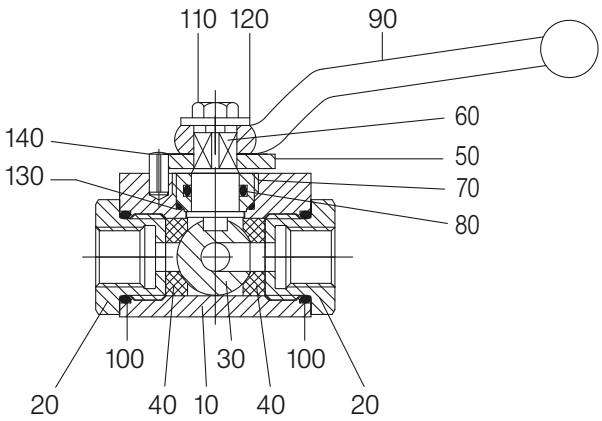

*Standard (can vary according to nominal width), other materials on request.
Due to the design, not all items are used for all nominal widths.

3-way changeover ball valve DBI-D, stainless steel

With female thread

DN 4 - 50 PN to 500

Series 06 – female thread on all sides DIN ISO 228-1

Temperature range Standard: -10°C to +90°C
On request: -50°C to +250°C

Range of use Liquids: Liquids group 1 and 2 according to PED 2014/68/EU Article 13
Gases: Liquids group 1 and 2 according to PED 2014/68/EU Article 13
As a matter of principle, the resistance to the flow medium must be ensured.

Technical specification Up to DN 25, ball valve type DBI-D consists of a block body, from DN 32 of a forged body with connector screwed in on one side. When using this ball valve, please note that, concerning the seal, this is a changeover ball valve. Pressure inlet must therefore be in the centre. Actuators can be attached by means of an extension kit. This retrofit requirement must be specified when placing the order (additional charge).

Please ask separately, where requirements exceed the standard conditions of use listed in this data sheet.
As a matter of principle, the operating and maintenance instructions, in particular the safety instructions must be observed!
Operating and maintenance instructions as well as the approval certificates can be downloaded at www.von-scheven.de.

We reserve the right to carry out technical modifications.

4.020 EN 08/17

Technical data DBI-D

Ball holes

L-form **T-form**

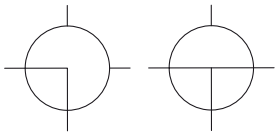

Series 06

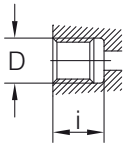

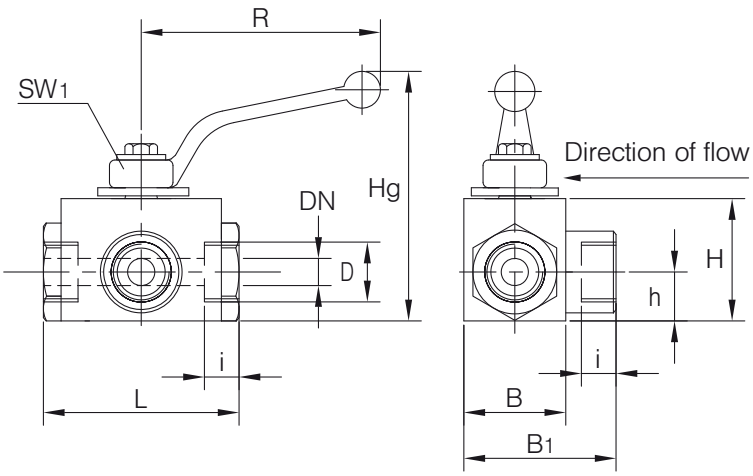

Series 06 (pipe female thread DIN ISO 228-1)

DN mm	PN bar	D	i mm	L mm	B mm	B1 mm	H mm	h mm	Hg mm	R mm	SW1 mm	Weight kg
4	500	G 1/8"	12.5	60	40	40	40	16	92	112	10	0.7
6	500	G 1/4"	12.5	60	40	40	40	16	92	112	10	0.7
10	500	G 3/8"	12.5	60	40	59	40	16	92	112	10	0.7
15	500	G 1/2"	15.0	75	45	65	45	19	85	130	10	1.2
20	320	G 3/4"	18.0	80	55	79	55	25	95	130	10	1.5
25	320	G 1"	20.0	90	65	91	65	30	111	160	10	2.4
32	160	G 1 1/4"	22.0	110	Ø 76	108	93	38	155	250	17	3.5
40	160	G 1 1/2"	23.0	120	Ø 90	135	104	45	166	250	17	4.8
50	160	G 2"	26.0	140	Ø100	120	116	50	178	250	17	5.9

Example of order: Ball valve type DBI-D in stainless steel, DN 15 with female thread DIN ISO 228-1 with L-ball (please state ball hole form)
DBI-D 15 06-L

Parts list DBI-D

Pos.	Designation	Material*
10	Body	Stainless steel
20	Fitting	Stainless steel
30	Ball	Stainless steel
40	Seal	POM
50	Stop washer	
60	Stem	Stainless steel
80	O-ring	FPM
90	Hand lever	Zinc die-casting
100	O-ring	FPM
110	Bolt	
120	Washer	
130	Sliding ring	PTFE
140	Stop pin	

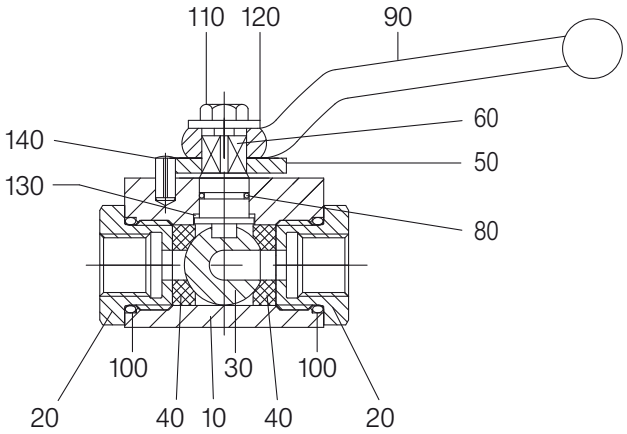

*Standard (can vary according to nominal width), other materials on request.
Due to the design, not all items are used for all nominal widths.

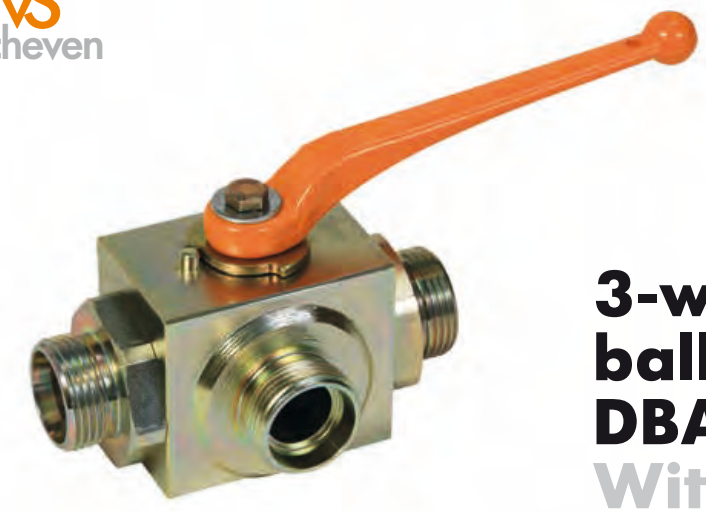

3-way changeover ball valve DBA-C, steel

With male thread

DN 4 - 40 PN to 500

Series 02 – male thread on both sides for non-soldering compression fittings with cutting ring DIN 2353 – light-duty series
03 – male thread on both sides for non-soldering compression fittings with cutting ring DIN 2353 – heavy-duty series

Temperature range Standard: -10°C to +90°C
On request: -50°C to +250°C

Range of use Liquids: Liquids group 1 and 2 according to PED 2014/68/EU Article 13
Gases: Liquids group 1 and 2 according to PED 2014/68/EU Article 13
As a matter of principle, the resistance to the flow medium must be ensured.

Technical specification Up to DN 25, ball valve type DBA-C consists of a block body, from DN 32 it consists of a forged body with connector screwed in on both sides.
When using this ball valve, please note that, concerning the seal, this is a changeover ball valve. Pressure inlet must therefore be in the centre. Actuators can be attached by means of an extension kit.
This retrofit requirement must be specified when placing the order (additional charge).

4.030 EN 08/17

Technical data DBA-C

Ball holes

L-form **T-form**

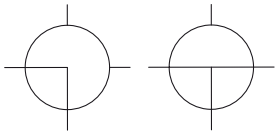

Series 03

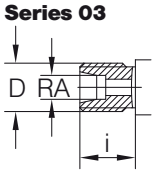

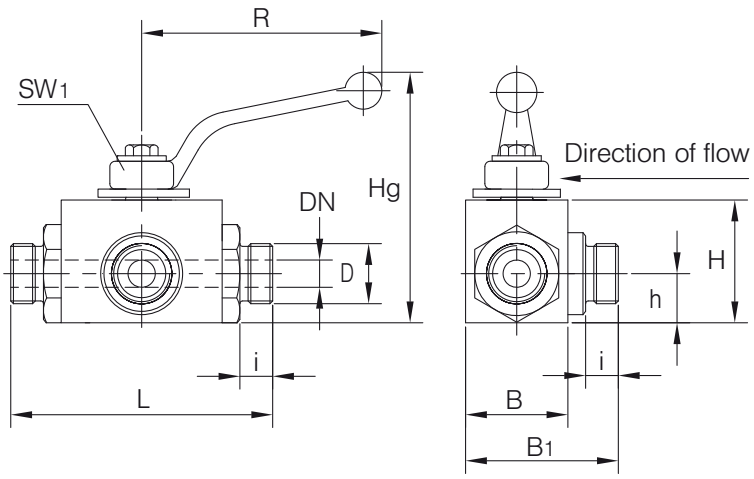

Series 02 (for non-soldering compression fittings with cutting ring DIN 2353, light-duty series)

DN mm	RA mm	PN bar	D mm	i mm	L mm	B mm	B1 mm	H mm	h mm	Hg mm	R mm	SW1 mm	Weight kg
4	6	500	M 12x1.5	10	76	25	41	30	12.5	61	76	7	0.4
6	8	500	M 14x1.5	10	76	25	41	30	12.5	61	76	7	0.4
8	10	500	M 16x1.5	11	76	30	47	40	15.0	92	112	10	0.6
10	12	500	M 18x1.5	11	80	30	47	40	15.0	92	112	10	0.6
12	15	500	M 22x1.5	12	96	35	55	45	18.0	85	130	10	1.0
16	18	400	M 26x1.5	12	105	40	60	50	21.0	90	130	10	1.1
20	22	320	M 30x2	14	110	45	67	55	24.0	95	130	10	1.4
25	28	320	M 36x2	14	120	55	75	65	30.0	111	160	10	2.4
32	35	160	M 45x2	16	124	55	83	93	38.0	155	250	17	3.8
40	42	160	M 52x2	16	124	55	80	104	45.0	166	250	17	4.5

Note! The pressure rating of the pipe unions can deviate from the nominal pressure rating of the ball valve.

Series 03 (for non-soldering compression fittings with cutting ring DIN 2353, heavy-duty series)

DN mm	RA mm	PN bar	D mm	i mm	L mm	B mm	B1 mm	H mm	h mm	Hg mm	R mm	SW1 mm	Weight kg
4	8	500	M 16x1.5	12	76	25	43	30	12.5	61	76	7	0.4
6	10	500	M 18x1.5	12	76	25	43	30	12.5	61	76	7	0.4
8	12	500	M 20x1.5	12	76	30	48	40	15.0	92	112	10	0.6
10	14	500	M 22x1.5	14	80	30	50	40	15.0	92	112	10	0.6
12	16	500	M 24x1.5	14	96	35	55	45	18.0	85	130	10	0.9
16	20	400	M 30x2	16	105	40	62	50	21.0	90	130	10	1.1
20	25	320	M 36x2	18	110	45	69	55	24.0	95	130	10	1.4
25	30	320	M 42x2	20	132	55	81	65	30.0	111	160	10	2.4
32	35	320	M 52x2	22	145	Ø76	110	93	38.0	155	250	17	4.0

Note! The pressure rating of the pipe unions can deviate from the nominal pressure rating of the ball valve.

Example of order: Ball valve type DBA-C of steel, DN 12 with male thread for non-soldering compression fittings with cutting ring DIN 2353 – light-duty series with L-ball (please state ball hole form)
DBA-C 12 02-L

Parts list DBA-C

Pos.	Designation	Material*
10	Body	Steel
20	Fitting	Steel
30	Ball	Steel
40	Seal	POM
50	Stop washer	
60	Stem	Steel
70	Fitting	Brass
80	O-ring	NBR
90	Hand lever	Zinc die-casting
100	O-ring	NBR
110	Bolt	
120	Washer	
130	O-ring	NBR
140	Stop pin	

*Standard (can vary according to nominal width), other materials on request.
Due to the design, not all items are used for all nominal widths.

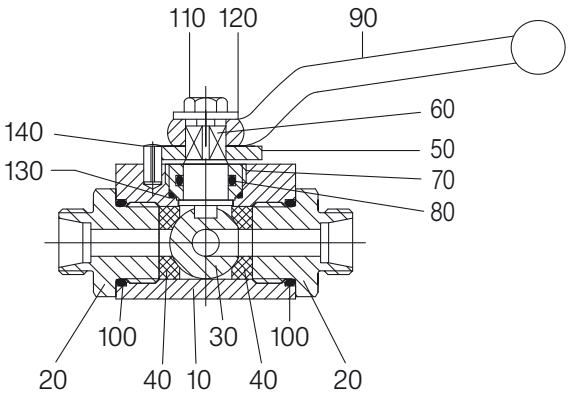

Please ask separately, where requirements exceed the standard conditions of use listed in this data sheet.
As a matter of principle, the operating and maintenance instructions, in particular the safety instructions must be observed!
Operating and maintenance instructions as well as the approval certificates can be downloaded at www.von-scheven.de.

We reserve the right to carry out technical modifications.

3-way changeover ball valve DBA-D, stainless steel

With male thread

DN 4 - 40 PN to 500

Series 02 – male thread on both sides for non-soldering compression fittings with cutting ring DIN 2353 – light-duty series
03 – male thread on both sides for non-soldering compression fittings with cutting ring DIN 2353 – heavy-duty series

Temperature range Standard: -10°C to +90°C
On request: -50°C to +250°C

Range of use Liquids: Liquids group 1 and 2 according to PED 2014/68/EU Article 13
Gases: Liquids group 1 and 2 according to PED 2014/68/EU Article 13
As a matter of principle, the resistance to the flow medium must be ensured.

Technical specification Up to DN 25, ball valve type DBA-D consists of a block body, from DN 32 it consists of a forged body with connector screwed in on both sides.
When using this ball valve, please note that, concerning the seal, this is a changeover ball valve. Pressure inlet must therefore be in the centre. Actuators can be attached by means of an extension kit.
This retrofit requirement must be specified when placing the order (additional charge).

4.040 EN 08/17

Technical data DBA-D

Ball holes

L-form **T-form**

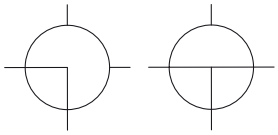

Series 03

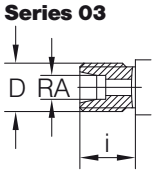

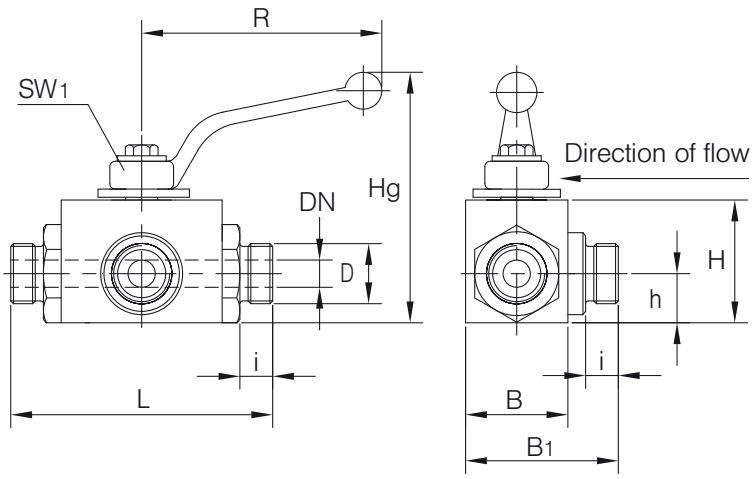

Series 02 (for non-soldering compression fittings with cutting ring DIN 2353, light-duty series)

DN mm	RA mm	PN bar	D mm	i mm	L mm	B mm	B1 mm	H mm	h mm	Hg mm	R mm	SW1 mm	Weight kg
4	6	500	M 12x1.5	10	76	40	56	40	16	92	112	10	0.6
6	8	500	M 14x1.5	10	76	40	56	40	16	92	112	10	0.6
8	10	500	M 16x1.5	11	76	40	57	40	16	92	112	10	0.6
10	12	500	M 18x1.5	11	80	40	57	40	16	92	112	10	0.6
12	15	500	M 22x1.5	12	96	45	65	45	19	85	130	10	0.9
16	18	500	M 26x1.5	12	105	45	65	45	19	85	130	10	1.1
20	22	320	M 30x2	14	110	55	77	55	25	95	130	10	1.4
25	28	320	M 36x2	14	120	65	85	65	30	111	160	10	2.4
32	35	160	M 45x2	16	124	Ø76	104	93	38	155	250	17	3.8
40	42	160	M 52x2	16	124	Ø90	115	104	45	166	250	17	4.5

Note! The pressure rating of the pipe unions can deviate from the nominal pressure rating of the ball valve.

Series 03 (for non-soldering compression fittings with cutting ring DIN 2353, heavy-duty series)

DN mm	RA mm	PN bar	D mm	i mm	L mm	B mm	B1 mm	H mm	h mm	Hg mm	R mm	SW1 mm	Weight kg
4	8	500	M 16x1.5	12	76	40	58	40	16	92	112	10	0.6
6	10	500	M 18x1.5	12	76	40	58	40	16	92	112	10	0.6
8	12	500	M 20x1.5	12	76	40	58	40	16	92	112	10	0.6
10	14	500	M 22x1.5	14	80	40	60	40	16	92	112	10	0.6
12	16	500	M 24x1.5	14	96	45	65	45	19	85	130	10	0.9
16	20	500	M 30x2	16	105	45	67	50	19	85	130	10	1.1
20	25	320	M 36x2	18	110	55	79	55	25	95	130	10	1.4
25	30	320	M 42x2	20	132	65	91	65	30	111	160	10	2.4
32	35	160	M 52x2	22	136	Ø70	104	93	38	155	250	17	4.0

Note! The pressure rating of the pipe unions can deviate from the nominal pressure rating of the ball valve.

Example of order: Ball valve type DBA-D of steel, DN 12 with male thread for non-soldering compression fittings with cutting ring DIN 2353 – light-duty series with L-ball (please state ball hole form)
DBA-D 12 02-L

Parts list DBA-D

Pos.	Designation	Material*
10	Body	Stainless steel
20	Fitting	Stainless steel
30	Ball	Stainless steel
40	Seal	POM
50	Stop washer	
60	Stem	Stainless steel
80	O-ring	FPM
90	Hand lever	Zinc die-casting
100	O-ring	FPM
110	Bolt	
120	Washer	
130	Sliding ring	PTFE
140	Stop pin	

*Standard (can vary according to nominal width), other materials on request.
Due to the design, not all items are used for all nominal widths.

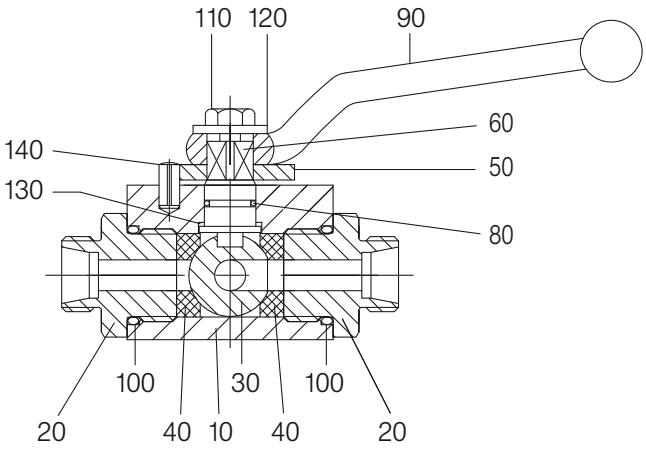

Please ask separately, where requirements exceed the standard conditions of use listed in this data sheet.
As a matter of principle, the operating and maintenance instructions, in particular the safety instructions must be observed!
Operating and maintenance instructions as well as the approval certificates can be downloaded at www.von-scheven.de.

We reserve the right to carry out technical modifications.

3-way changeover ball valve DBF-C, DBF-D, steel, stainless steel

With flange connection

DN 25 - 100 PN to 40

Series 26 – PN 16 according to DIN EN 1092-1
28 – PN 40 according to DIN EN 1092-1

Face-to-face lengths DIN EN 558 FTF basic series 1 (alternatively: DIN 3202-1 Series F1)

Temperature range Standard: -10°C to +150°C
On request: -50°C to +250°C

Range of use Liquids: Liquids group 1 and 2 according to PED 2014/68/EU Article 13
Gases: Liquids group 1 and 2 according to PED 2014/68/EU Article 13
As a matter of principle, the resistance to the flow medium must be ensured.

Technical specification DBF-C and DBF-D type ball valves consist of a 3-part body. The stem is blowout-proof and, from nominal width DN 32 is provided with a two-fold O-ring seal.
When using these ball valves, please note that, concerning the seal, this is a changeover ball valve. Pressure inlet must therefore be in the centre. Actuators can be attached by means of an extension kit. This retrofit requirement must be specified when placing the order (additional charge).

Please ask separately, where requirements exceed the standard conditions of use listed in this data sheet.
As a matter of principle, the operating and maintenance instructions, in particular the safety instructions must be observed!
Operating and maintenance instructions as well as the approval certificates can be downloaded at www.von-scheven.de.

We reserve the right to carry out technical modifications.

4.050 EN 08/17

Technical data DBF-C, DBF-D

Ball holes

L-form **T-form**

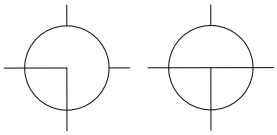

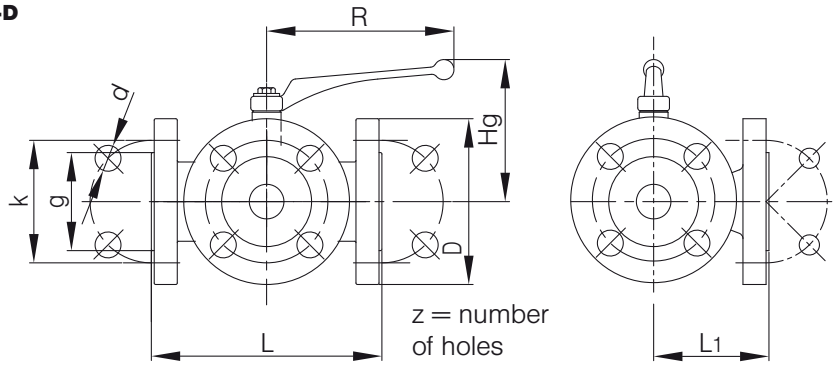

Direction of flow

Series 26 (PN 16 according to DIN EN 1092-1)

DN mm	L mm	L1 mm	D mm	g mm	k mm	z mm	d mm	Hg mm	R mm	SW mm
25	160	80	115	68	85	4	14	82	160	10
32	180	90	140	78	100	4	18	117	250	17
40	200	100	150	88	110	4	18	121	250	17
50	230	115	165	102	125	4	18	128	250	17
65	290	125	185	122	145	4	18	158	250	17
80	310	155	200	138	160	8	18	181	370	22
100	350	175	220	158	180	8	18	350	370	22
125*)	400	200	250	188	210	8	18	170	520	22

*) clear width 100 mm

Series 28 (PN 40 according to DIN EN 1092-1)

DN mm	L mm	L1 mm	D mm	g mm	k mm	z mm	d mm	Hg mm	R mm	SW mm
25	160	80	115	68	85	4	14	82	160	10
32	180	90	140	78	100	4	18	117	250	17
40	200	100	150	88	110	4	18	121	250	17
50	230	115	165	102	125	4	18	128	250	17
65	290	145	185	122	145	8	18	158	250	17
80	310	155	200	138	160	8	18	181	370	22
100	350	175	235	162	190	8	22	194	370	22

Example of order: Ball valve type DBF-C DN 50 with flange connection PN 16 according to DIN EN 1092-1 with L-bore (please state ball hole form) **DBF-C 5026-L**

Parts list		**DBF-C**	**DBF-D**
Pos.	Designation	Material*	Material*
10	Body	Steel	Stainless steel
20	Screw-in flange	Steel	Stainless steel
30	Ball	Steel	Stainless steel
40	Seal	PTFE	PTFE
50	Stop washer		
60	Stem	Steel	Stainless steel
80	O-ring	NBR	NBR
90	Hand lever	Zinc die-casting	Zinc die-casting
100	O-ring	NBR	NBR
110	Bolt		
120	Washer		
130	Sliding ring	PTFE	PTFE
140	Stop pin		

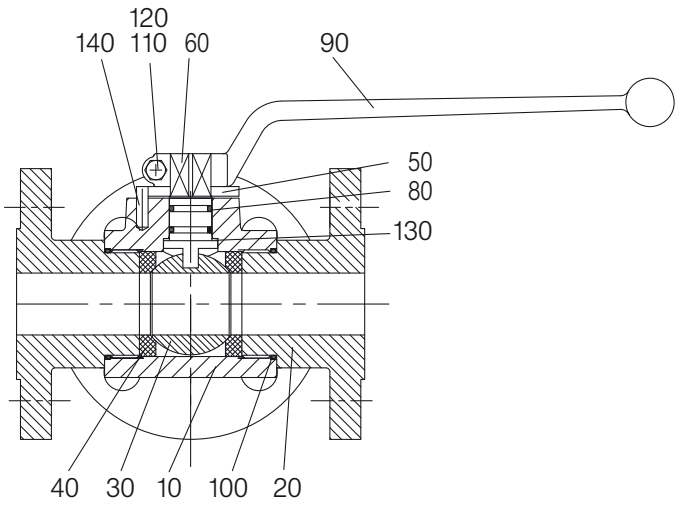

*Standard (can vary according to nominal width), other materials on request.
Due to the design, not all items are used for all nominal widths.

3- and 4-way low-pressure block ball valve NBDI-C, NBVI-C, NBDI-D, NBVI-D, steel

With female thread

DN 4 - 25 PN max. 40

Also available in stainless steel.

Series 06 – female thread on all sides DIN ISO 228-1

Temperature range Standard: -10°C to +150°C
On request: -50°C to +250°C

Range of use Liquids: Liquids group 1 and 2 according to PED 2014/68/EU Article 13
Gases: Liquids group 1 and 2 according to PED 2014/68/EU Article 13
As a matter of principle, the resistance to the flow medium must be ensured.

Technical specification NBDI-C, NBVI-C, NBDI-D and NBVI-D type ball valves consist of a block body with screwed in connectors. Actuators can be attached by means of an assembly kit. This retrofitment requirement must be specified when placing the order (additional charge).

Please ask separately, where requirements exceed the standard conditions of use listed in this data sheet.
As a matter of principle, the operating and maintenance instructions, in particular the safety instructions must be observed!
Operating and maintenance instructions as well as the approval certificates can be downloaded at www.von-scheven.de.

We reserve the right to carry out technical modifications.

4.100 EN 08/17

Technical data

NBDI-C, NBVI-C, NBDI-D, NBVI-D

Ball holes

L-form **T-form** **X-form**

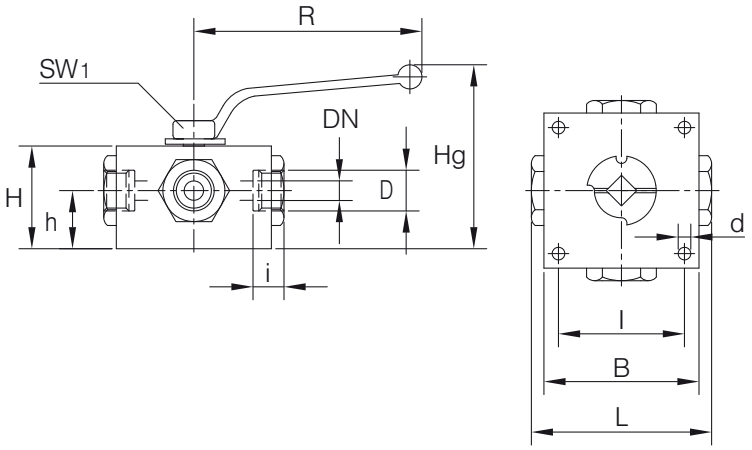

Series 06

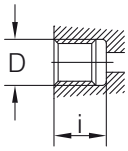

Series 06 (pipe female thread DIN ISO 228-1)

DN mm	PN bar	D	i mm	L mm	l* mm	B mm	d mm	H mm	h mm	Hg mm	R mm	SW1 mm	Weight kg
4	40	G 1/8"	11.0	82	55	70	6.5	45	26.0	91	160	10	1.7
6	40	G 1/4"	12.5	82	55	70	6.5	45	26.0	91	160	10	1.7
10	40	G 3/8"	12.5	91	65	80	6.5	53	30.0	103	160	10	2.6
15	40	G 1/2"	14.5	119	80	100	9.0	60	35.0	122	250	17	4.4
20	40	G 3/4"	18.0	123	85	107	9.0	72	42.5	125	370	22	5.8
25	40	G 1"	20.0	142	105	126	11.0	85	47.5	139	370	22	9.5

*In stainless steel: Deviating dimensions

Example of order: NBDI-C type three-way ball valve made of steel, DN 15 with female thread DIN ISO 228-1 with ball holes in L-shape **NBDI-C 15 06-L**

Parts list

Pos.	Designation	NBDI-C NBVI-C Material*	NBDI-D NBVI-D Material*
10	Body	Steel	Stainless steel
20	Fitting	Steel	Stainless steel
30	Ball	Steel	Stainless steel
40	Seal	PTFE	PTFE
60	O-ring	NBR	NBR/FPM
70	O-ring	NBR	NBR/FPM
80	Fitting	Steel	Stainless steel
90	O-ring	NBR	NBR/FPM
100	Hand lever	Zinc die-casting	Zinc die-casting
120	Stop washer		
140	Stop pin		
160	Supporting ring	PTFE	PTFE
200	Blanking plug	Steel	Stainless steel

*Standard (can vary according to nominal width), other materials on request.
Due to the design, not all items are used for all nominal widths.

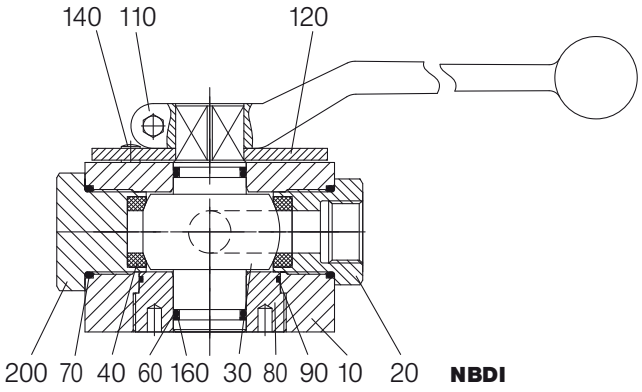

NBDI

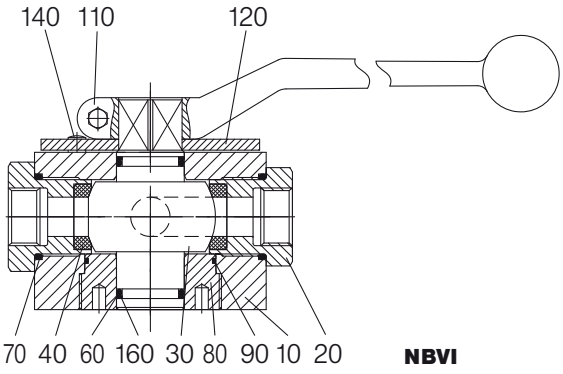

NBVI

3- and 4-way low-pressure block ball valve NBDA-C, NBVA-C, NBDA-D, NBVA-D, steel

With male thread

DN 4 - 25 PN max. 40

Also available in stainless steel.

Series
02 – male thread on all sides for non-soldering compression fittings with cutting ring DIN 2353 – light-duty series
03 – male thread on all sides for non-soldering compression fittings with cutting ring DIN 2353 – heavy-duty series

Temperature range
Standard: -10°C to +150°C
On request: -50°C to +250°C

Range of use
Liquids: Liquids group 1 and 2 according to PED 2014/68/EU Article 13
Gases: Liquids group 1 and 2 according to PED 2014/68/EU Article 13
As a matter of principle, the resistance to the flow medium must be ensured.

Technical specification
NBDA-C, NBVA-C, NBDA-D and NBVA-D type ball valves consist of a block body with screwed in connectors. Actuators can be attached by means of an extension kit. This retrofit requirement must be specified when placing the order (additional charge).

4.110 EN 05/2015

Technical data
NBDA-C, NBVA-C, NBDA-D, NBVA-D

Ball holes

L-form **T-form** **X-form**

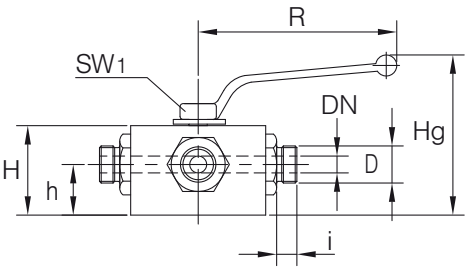

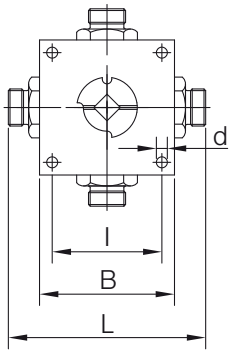

Series 03

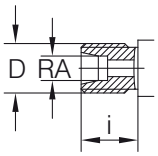

Series 02 (for non-soldering compression fittings with cutting ring DIN 2353, light-duty series)

DN mm	RA mm	PN bar	D mm	i mm	L mm	l* mm	B mm	d mm	H mm	h mm	Hg mm	R mm	SW1 mm	Weight kg
4	6	40	M 12x1.5	10	102	55	70	6.5	45	26.0	91	160	10	1.7
6	8	40	M 14x1.5	10	102	55	70	6.5	45	26.0	91	160	10	1.7
8	10	40	M 16x1.5	11	113	65	80	6.5	53	30.0	103	160	10	2.6
10	12	40	M 18x1.5	11	113	65	80	6.5	53	30.0	103	160	10	2.6
12	15	40	M 22x1.5	12	136	80	100	9.0	60	35.0	122	250	17	4.4
16	18	40	M 26x1.5	12	136	80	100	9.0	60	35.0	122	250	17	4.4
20	22	40	M 30x2	14	150	85	107	9.0	72	42.5	126	370	22	5.8
25	28	40	M 36x2	14	178	105	126	11.0	85	47.5	139	370	22	9.5

Note! The pressure rating of the pipe unions can deviate from the nominal pressure rating of the ball valve.
*In stainless steel: Deviating dimensions

Series 03 (for non-soldering compression fittings with cutting ring DIN 2353, heavy-duty series)

DN mm	RA mm	PN bar	D mm	i mm	L mm	l* mm	B mm	d mm	H mm	h mm	Hg mm	R mm	SW1 mm	Weight kg
4	8	40	M 16x1.5	12	106	55	70	6.5	45	26.0	83	185	10	1.7
6	10	40	M 18x1.5	12	106	55	70	6.5	45	26.0	83	185	10	1.7
8	12	40	M 20x1.5	12	115	65	80	6.5	53	30.0	95	185	10	2.6
10	14	40	M 22x1.5	14	119	65	80	6.5	53	30.0	95	185	10	2.6
12	16	40	M 24x1.5	14	140	80	100	9.0	60	35.0	122	250	17	4.4
16	20	40	M 30x2	16	144	80	100	9.0	60	35.0	122	250	17	4.4
20	25	40	M 36x2	18	158	85	107	9.0	72	42.5	126	370	22	5.8
25	30	40	M 42x2	20	182	105	126	11.0	85	47.5	139	370	22	9.5

Note! The pressure rating of the pipe unions can deviate from the nominal pressure rating of the ball valve.
*In stainless steel: Deviating dimensions

Example of order: NBDA-C type three-way ball valve made of steel, DN 20 with male thread for non-soldering compression fittings with cutting ring DIN 2353 - light-duty series (series 02) and ball hole in X-form
NBA-C 20 02-X

Parts list		NBDA-C NBVA-C	NBDA-D NBVA-D
Pos.	Designation	Material*	Material*
10	Body	Steel	Stainless steel
20	Fitting	Steel	Stainless steel
30	Ball	Steel	Stainless steel
40	Seal	PTFE	PTFE
60	O-ring	NBR	NBR/FPM
70	O-ring	NBR	NBR/FPM
80	Fitting	Steel	Stainless steel
90	O-ring	NBR	NBR / FPM
100	Hand lever	Zinc die-casting	Zinc die-casting
120	Stop washer		
140	Stop pin		
160	Supporting ring	PTFE	PTFE
200	Blanking plug	Steel	Stainless steel

*Standard (can vary according to nominal width), other materials on request.
Due to the design, not all items are used for all nominal widths.

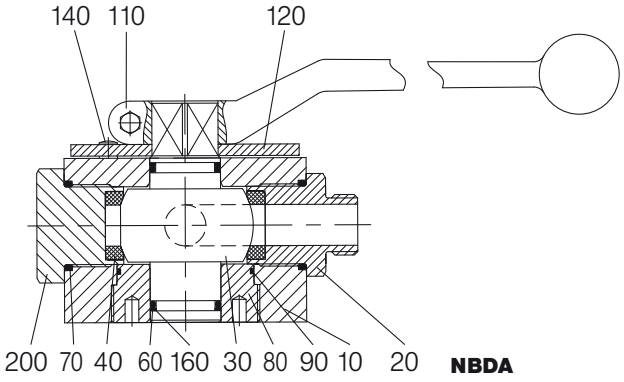

NBDA

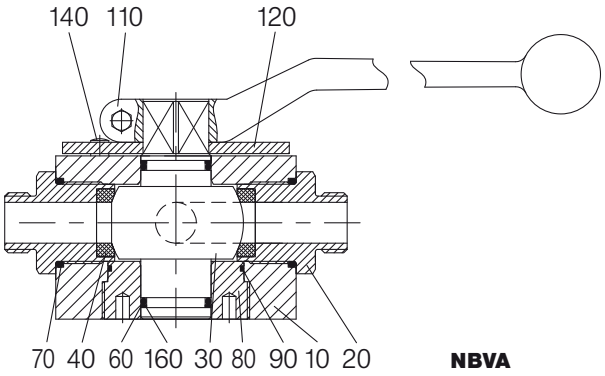

NBVA

Please ask separately, where requirements exceed the standard conditions of use listed in this data sheet.
As a matter of principle, the operating and maintenance instructions, in particular the safety instructions must be observed!
Operating and maintenance instructions as well as the approval certificates can be downloaded at www.von-scheven.de.

We reserve the right to carry out technical modifications.

3- and 4-way high-pressure block ball valve HBDI-C, HBVI-C, HBDI-D, HBVI-D, steel

With female thread

DN 4 - 25 PN max. 500

Also available in stainless steel.

Series 06 – female thread on all sides DIN ISO 228-1

Temperature range Standard: -10°C to +90°C
On request: -50°C to +250°C

Range of use Liquids: Liquids group 1 and 2 according to PED 2014/68/EU Article 13
Gases: Liquids group 1 and 2 according to PED 2014/68/EU Article 13
As a matter of principle, the resistance to the flow medium must be ensured.

Technical specification HBDI-C, HBVI-C, HBDI-D and HBVI-D type ball valves consist of a block body with screwed in connectors. Actuators can be attached by means of an extension kit. This retrofit requirement must be specified when placing the order (additional charge).

Please ask separately, where requirements exceed the standard conditions of use listed in this data sheet.
As a matter of principle, the operating and maintenance instructions, in particular the safety instructions must be observed!
Operating and maintenance instructions as well as the approval certificates can be downloaded at www.von-scheven.de.

We reserve the right to carry out technical modifications.

4.120 EN 08/17

Technical data

HBDI-C, HBVI-C, HBDI-D, HBVI-D

Ball holes

L-form **T-form** **X-form**

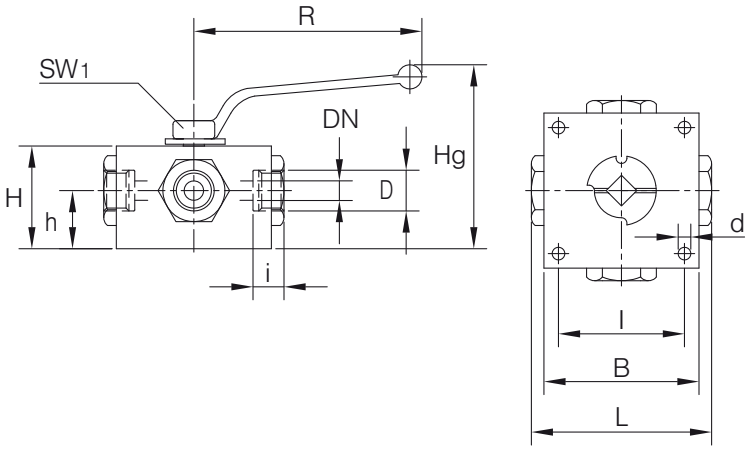

Series 06

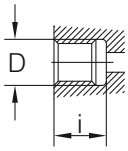

Series 06 (pipe female thread DIN ISO 228-1)

DN mm	PN bar	D	i mm	L mm	l* mm	B mm	d mm	H mm	h mm	Hg mm	R mm	SW1 mm	Weight kg
4	500	G 1/8"	11.0	82	55	70	6.5	45	26.0	91	160	10	1.7
6	500	G 1/4"	12.5	82	55	70	6.5	45	26.0	91	160	10	1.7
10	400	G 3/8"	12.5	98	65	80	6.5	53	30.0	103	160	10	2.6
15	320	G 1/2"	14.5	119	80	100	9.0	60	35.0	122	250	17	4.4
20	250	G 3/4"	18.0	130	85	107	9.0	72	42.5	126	370	22	5.8
25	160	G 1"	20.0	150	105	126	11.0	85	47.5	139	370	22	9.5

*In stainless steel: Deviating dimensions

Example of order: HBDI-C type three-way ball valve made of steel, DN 15 with female thread DIN ISO 228-1 with ball holes in T-form
HBDI-C 15 06-T

Parts list

Pos.	Designation	HBDI-C HBVI-C Material*	HBDI-D HBVI-D Material*
10	Body	Steel	Stainless steel
20	Fitting	Steel	Stainless steel
30	Ball	Steel	Stainless steel
40	Sealing piston	POM/brass	POM/brass
60	O-ring	NBR	NBR
70	O-ring	NBR	NBR
80	Fitting	Steel	Stainless steel
90	O-ring	NBR	NBR
100	Hand lever	Zinc die-casting	Zinc die-casting
110	O-ring	NBR	NBR
120	Stop washer		
140	Stop pin		
160	Supporting ring	PTFE	PTFE
200	Blanking plug	Steel	Stainless steel

*Standard (can vary according to nominal width), other materials on request.
Due to the design, not all items are used for all nominal widths.

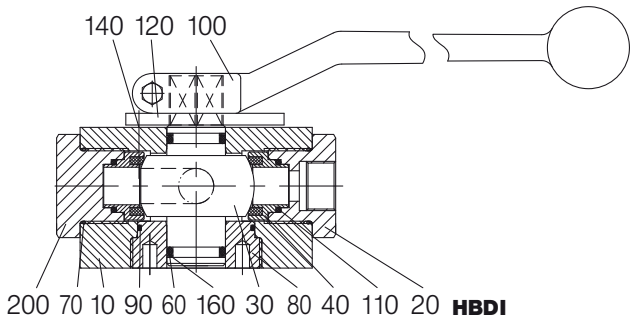

HBDI

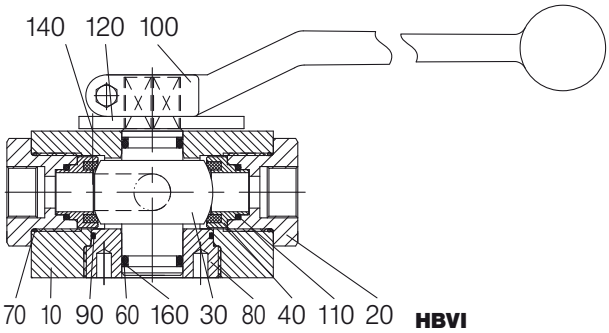

HBVI

3- and 4-way high-pressure block ball valve HBDA-C, HBVA-C, HBDA-D, HBVA-D, steel

With male thread

DN 4 - 25 **PN max. 500**

Also available as a stainless steel ball valve.

Series
02 – male thread on all sides for non-soldering compression fittings with cutting ring DIN 2353 – light-duty series
03 – male thread on all sides for non-soldering compression fittings with cutting ring DIN 2353 – heavy-duty series

Temperature range
Standard: -10°C to +90°C
On request: -50°C to +250°C

Range of use
Liquids: Liquids group 1 and 2 according to PED 2014/68/EU Article 13
Gases: Liquids group 1 and 2 according to PED 2014/68/EU Article 13
As a matter of principle, the resistance to the flow medium must be ensured.

Technical specification
HBDA-C, HBVA-C, HBDA-D and HBVA-D type ball valves consist of a block body with screwed in connectors. Actuators can be attached by means of an extension kit. This retrofit requirement must be specified when placing the order (additional charge).

4.130 EN 08/17

Technical data
HBDA-C, HBVA-C, HBDA-D, HBVA-D

Ball holes

L-form **T-form** **X-form**

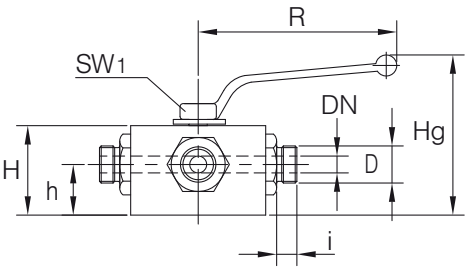

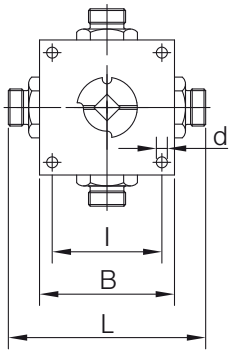

Series 03

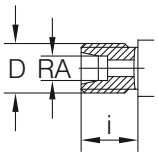

Series 02 (for non-soldering compression fittings with cutting ring DIN 2353, light-duty series)

DN mm	RA mm	PN bar	D mm	i mm	L mm	l* mm	B mm	d mm	H mm	h mm	Hg mm	R mm	SW1 mm	Weight kg
4	6	500	M 12x1.5	10	102	55	70	6.5	45	26.0	91	160	10	1.7
6	8	500	M 14x1.5	10	102	55	70	6.5	45	26.0	91	160	10	1.7
8	10	400	M 16x1.5	11	113	65	80	6.5	53	30.0	103	160	10	2.6
10	12	400	M 18x1.5	11	113	65	80	6.5	53	30.0	103	160	10	2.6
12	15	320	M 22x1.5	12	136	80	100	9.0	60	35.0	122	250	17	4.4
16	18	320	M 26x1.5	12	136	80	100	9.0	60	35.0	122	250	17	4.4
20	22	250	M 30x2	14	150	85	107	9.0	72	42.5	126	370	22	5.8
25	28	160	M 36x2	14	178	105	126	11.0	85	47.5	139	370	22	9.5

Note! The pressure rating of the pipe unions can deviate from the nominal pressure rating of the ball valve.
*In stainless steel: Deviating dimensions

Series 03 (for non-soldering compression fittings with cutting ring DIN 2353, heavy-duty series)

DN mm	RA mm	PN bar	D mm	i mm	L mm	l* mm	B mm	d mm	H mm	h mm	Hg mm	R mm	SW1 mm	Weight kg
4	8	500	M 16x1.5	12	106	55	70	6.5	45	26.0	91	160	10	1.7
6	10	500	M 18x1.5	12	106	55	70	6.5	45	26.0	91	160	10	1.7
8	12	400	M 20x1.5	12	115	65	80	6.5	53	30.0	103	160	10	2.6
10	14	400	M 22x1.5	14	119	65	80	6.5	53	30.0	103	160	10	2.6
12	16	320	M 24x1.5	14	140	80	100	9.0	60	35.0	122	250	17	4.4
16	20	320	M 30x2	16	144	80	100	9.0	60	35.0	122	250	17	4.4
20	25	250	M 36x2	18	158	85	107	9.0	72	42.5	126	370	22	5.8
25	30	160	M 42x2	20	190	105	126	11.0	85	47.5	139	370	22	9.5

Note! The pressure rating of the pipe unions can deviate from the nominal pressure rating of the ball valve.
*In stainless steel: Deviating dimensions

Example of order: HBDA-C type three-way ball valve of steel, DN 12 with male thread for non-soldering compression fittings with cutting ring DIN 2353 – light-duty series and ball hole in T-form
HDBA-C 12 02-T

Parts list		HBDA-C HBVA-C	HBDA-D HBVA-D
Pos.	Designation	Material*	Material*
10	Body	Steel	Stainless steel
20	Fitting	Steel	Stainless steel
30	Ball	Steel	Stainless steel
40	Sealing piston	POM/brass	POM/brass
60	O-ring	NBR	NBR
70	O-ring	NBR	NBR
80	Fitting	Steel	Stainless steel
90	O-ring	NBR	NBR
100	Hand lever	Zinc die-casting	Zinc die-casting
110	O-ring	NBR	NBR
120	Stop washer		
140	Stop pin		
160	Supporting ring	PTFE	PTFE
200	Blanking plug	Steel	Stainless steel

*Standard (can vary according to nominal width), other materials on request.
Due to the design, not all items are used for all nominal widths.

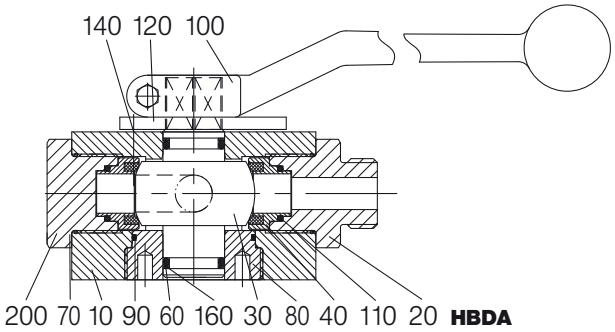

HBDA

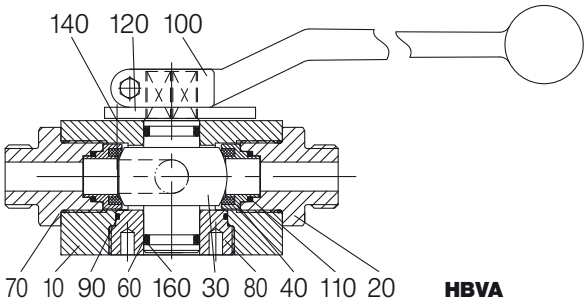

HBVA

Please ask separately, where requirements exceed the standard conditions of use listed in this data sheet.
As a matter of principle, the operating and maintenance instructions, in particular the safety instructions must be observed!
Operating and maintenance instructions as well as the approval certificates can be downloaded at www.von-scheven.de.

We reserve the right to carry out technical modifications.

For example:

Longwall systems

Gone are the days in which miners were accompanied by pit ponies for a long day of sweat and toil, assisted by a trusted canary to detect imminent danger from toxic gases. Today, pit ponies have been replaced by conveyor belts, pickaxes by shearers and mine props by high-tech hydraulic roof supports. The latter have a bearing force of 1,000 tons and more, thus offering maximum underground protection for humans and machinery. State-of-the-art longwall systems rely on complex hydraulics technology – featuring long hose lines and our ball valves. Designed and engineered for heavy-duty mining applications, they ensure the very best in reliability and safety.

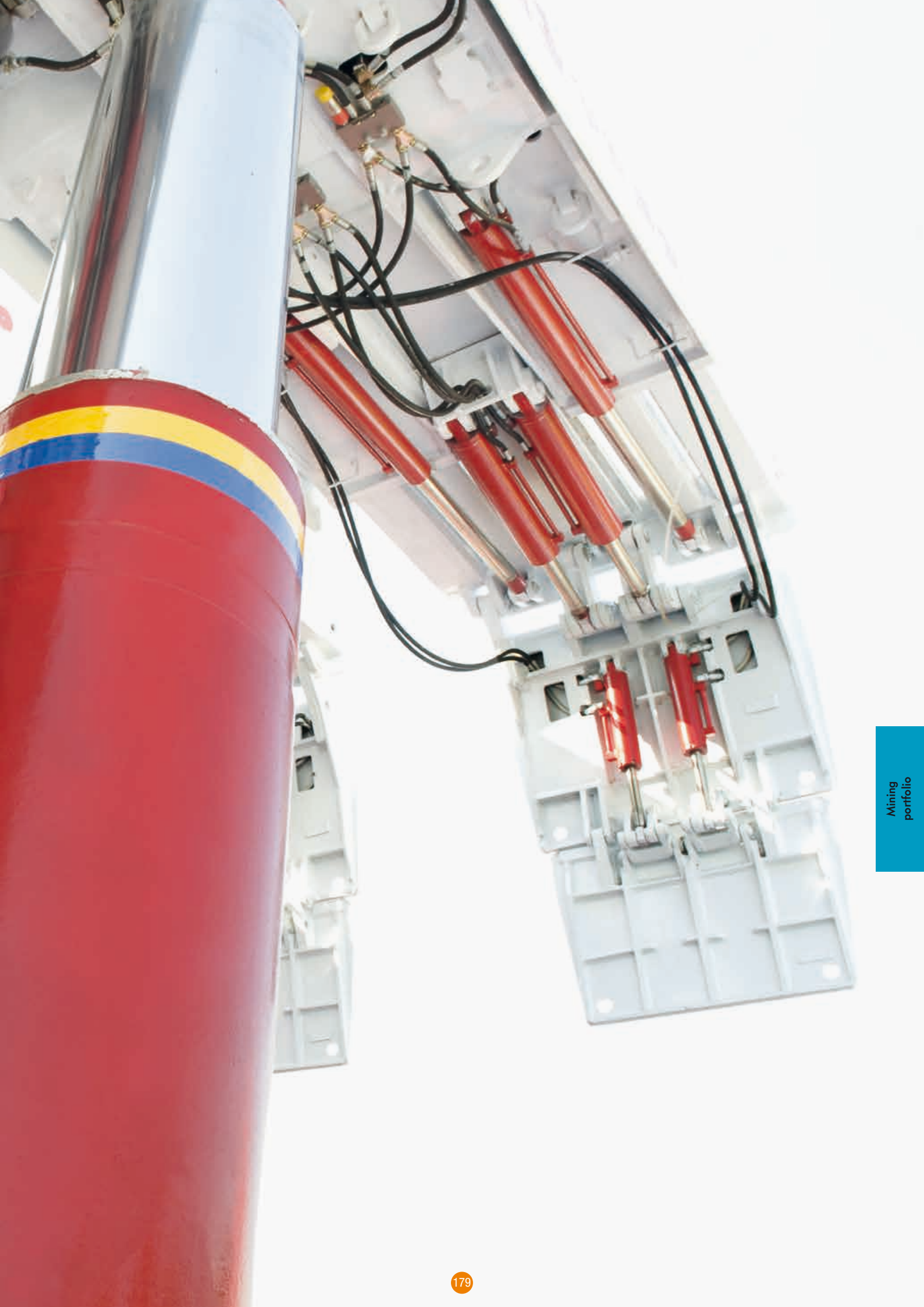

vonScheven

Designation		Steck-O DN 06	10	12	19 (20)	25	31 (32)	38 (40)	51 (50)	63 (65)	80	100	Page
	HBSK-C		●	●	●	●	●						182
	SIBK-C		●	●	●	●	●						182
	SIBK-D		●	●	●	●							186
	HBS-C HBS-D	● ●	● ●	● ●	● ●	● ●	● ●						188 188
	SIB-C SIB-D	● ●	● ●	● ●	● ●	● ●	● ●						188 188
	HKS-C		●	●	●								192
	SI-C		●	●	●								194
	HKS-C HKS-D							● ●	● ●	● ●	● ●		196 196
	DBS-C DBS-D		● ●	● ●	● ●	● ●	● ●						208 208
	HBDS-C HBDS-D HBVS-C HBVS-D		● ● ● ●	● ● ● ●	● ● ● ●	● ● ● ●							210 210 210 210

5.000 EN 08/17

Super-Steck-O DN

Designation		06	10	12	19 (20)	25	31 (32)	38 (40)	51 (50)	63 (65)	80	100	Page
	HBS-C HBS-D			● ●	● ●	● ●	● ●						198 198
	SIB-C SIB-D			● ●	● ●	● ●	● ●						198 198
	HKS-C HKS-D							● ●	● ●				202 202

SSKV DN

Designation		06	10	12	19 (20)	25	31 (32)	38 (40)	51 (50)	63 (65)	80	100	Page
	SIB-C SIB-D		● ●	● ●	● ●	● ●	● ●						204 204
	HKS-C HKS-D							● ●	● ●	●	●	●	204 204

C = Steel version
D = Stainless steel version

High pressure compact ball valve HBSK-C, SIBK-C, steel

With Steck-O connector

DN 10 - 31 (32) PN max. 500

Also available as a stainless steel ball valve.

Series 15 – male - female connectors
16 – female - female connectors

Temperature range Standard: -10°C to +90°C
On request: -50°C to +250°C

Range of use Liquids: Liquids group 2 according to PED 2014/68/EU Article 13
Gases: Liquids group 2 according to PED 2014/68/EU Article 13
As a matter of principle, the resistance to the flow medium must be ensured.

Technical specification Ball valves HBSK-C and SIBK-C are designed as compact ball valves with fixed female connector integrated in the body and screwed-in connector. The stem is fitted blowout-proof from the outside.
Fast fitment in suitable HD line systems is possible by means of the male/female connection variant. With the safety locking handle (SIBK-C) option, apart from the one-sided lock in closed position, the positions can also be fixed on both sides. Also available with locking capability.

Safety locking handle– Choice of colours

Retaining nut

Red Silver Yellow Black

Retaining nut lockable and rotatable

Green Orange White Blue

5.010 EN 08/17

Technical data
HBSK-C, HBSK-D, SIBK-C

DN 10 to 19

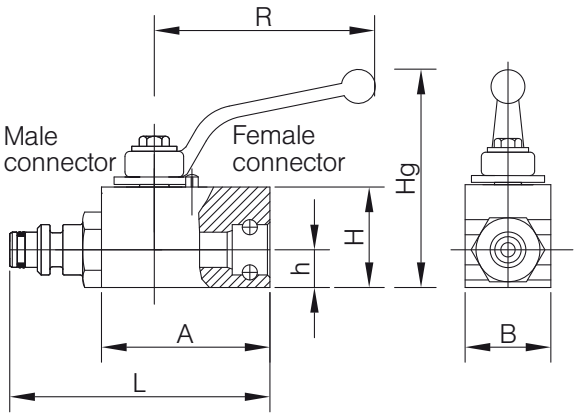

DN 25 and 31

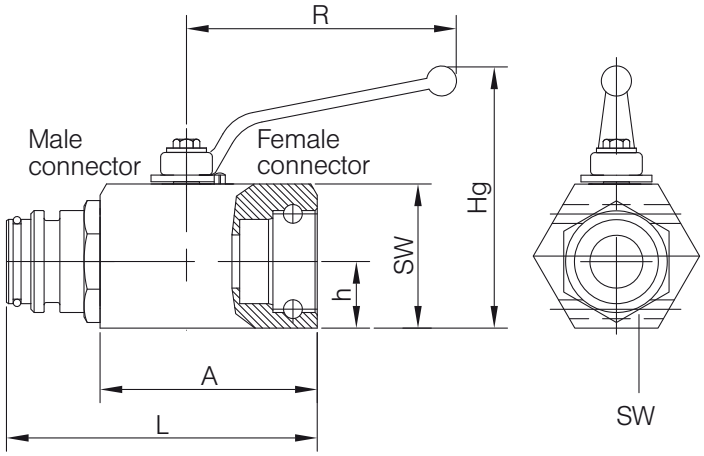

Series 15

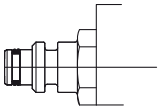

Series 16

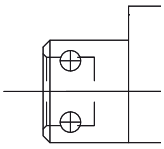

Series 15 (fixed female – male)

Steck-O DN	PN bar	A mm	L mm	h mm	H mm	B mm	SW mm	R mm	Hg mm	Weight kg
10	500	70.5	106	15.0	40	30	–	112	92	0.85
12	500	76.0	112	18.0	45	35	–	130	85	1.00
19 (20)	450	78.0	114	23.0	50	40	–	130	90	1.30
25	400	90.0	133	59.0	–	–	60	160	108	2.20
31 (32)	300	100.0	143	62.5	–	–	65	160	113	2.60

Series 16 (fixed female – fixed female, up to DN 19 one female swivelling)

Steck-O DN	PN bar	A mm	L mm	h mm	H mm	B mm	SW mm	R mm	Hg mm	Weight kg
10	500	70.5	88	15.0	40	30	–	112	92	0.9
12	500	76.0	111	18.0	45	35	–	130	85	1.1
19 (20)	450	78.0	118	23.0	50	40	–	130	90	1.4
25	400	90.0	134	59.0	–	–	60	160	108	2.3
31 (32)	300	100.0	141	62.5	–	–	65	160	113	2.8

Example of order: Ball valve type HBSK-C made of steel with connector:
Steck-O DN 25 female – male (series 15) with hand lever
HBSK-C 25 15

Parts list **HBSK-C**

Pos.	Designation	Material*
10	Body	Steel
20	Fitting	Steel
30	Ball	Steel
40	Seal	POM
50	Stop washer	Steel
60	Stem	Steel
70	Fitting	Brass
80	O-ring	NBR
90	Hand lever	Zinc die-casting
100	O-ring	NBR
110	Bolt	
120	Washer	
130	O-ring	NBR
140	Stop pin	
170	O-ring	NBR
180	Supporting ring	POM

*Standard (can vary according to nominal width), other materials on request.
Due to the design, not all items are used for all nominal widths.

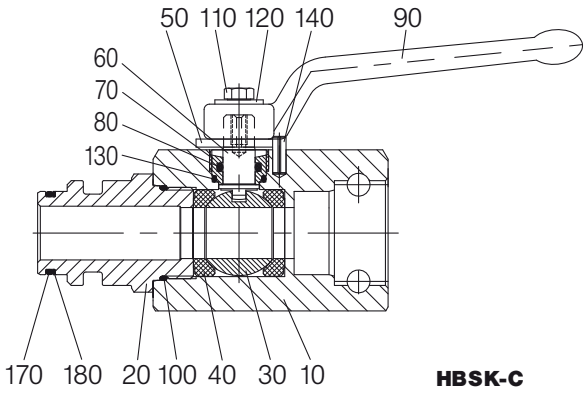

HBSK-C

Parts list SIBK-C

Pos.	Designation	Material*
10	Body	Steel
20	Fitting	Steel
30	Ball	Steel
40	Seal	POM
60	Stem	Stainless steel
70	Fitting	Brass
80	O-ring	NBR
90	Safety locking handle	Zinc die-casting
100	O-ring	NBR
110	Retaining nut	Brass
120	O-ring	NBR
130	O-ring	NBR
160	Spring	Stainless steel
170	O-ring	NBR
180	Supporting ring	POM

*Standard (can vary according to nominal width), other materials on request.
Due to the design, not all items are used for all nominal widths.

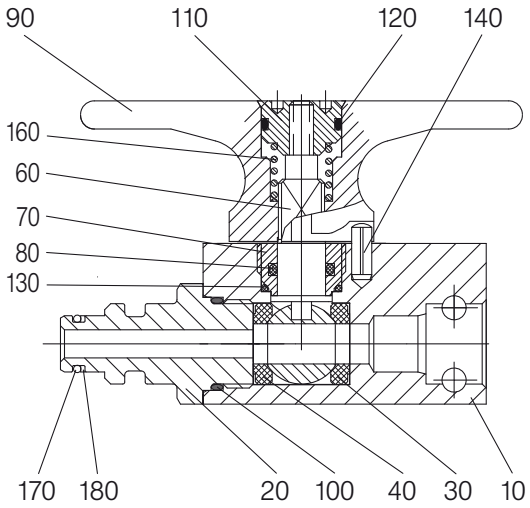

SIBK-C

Please ask separately, where requirements exceed the standard conditions of use listed in this data sheet.
As a matter of principle, the operating and maintenance instructions, in particular the safety instructions must be observed!
Operating and maintenance instructions as well as the approval certificates can be downloaded at www.von-scheven.de.

We reserve the right to carry out technical modifications.

High pressure compact ball valve SIBK-D, stainless steel

With Steck-O connector

DN 10-25 PN max. 500

Series 15 – female-male connectors
16 – female-female connectors

Temperature range Standard: -10°C to +90°C;
On request: -50°C to +250°C

Range of use Liquids: Liquids group 2 according to PED 2014/68/EU Article 13
Gases: Liquids group 2 according to PED 2014/68/EU Article 13
As a matter of principle, the resistance to the flow medium must be ensured.

Technical specification Ball valve SIBK-D is designed as a compact ball valve with fixed female connector integrated in the body and screwed-in connector. The stainless steel stem is fitted blowout-proof from the outside. Fast fitment in suitable HD line systems is possible by means of the male/female connection variant. With the safety locking handle (SIBK-C) option, apart from the one-sided lock in closed position, the positions can also be fixed on both sides. Also available with locking capability.

Safety locking handle– Choice of colours

Retaining nut

Red Silver Yellow Black

Retaining nut lockable and rotatable

Green Orange White Blue

Please ask separately, where requirements exceed the standard conditions of use listed in this data sheet.
As a matter of principle, the operating and maintenance instructions, in particular the safety instructions must be observed!
Operating and maintenance instructions as well as the approval certificates can be downloaded at www.von-scheven.de.

We reserve the right to carry out technical modifications.

5.020 EN 08/17

Technical data SIBK-D

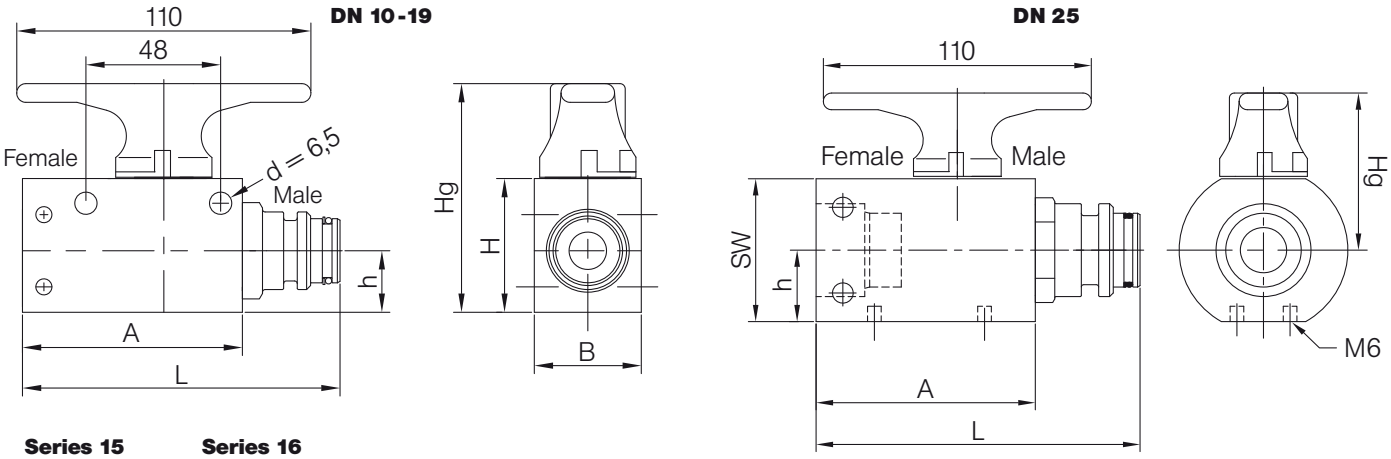

Series 15 **Series 16**

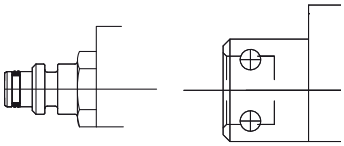

Series 15 (fixed female – male)

Steck-O DN	PN bar	A mm	L mm	h mm	H mm	B mm	SW mm	Hg mm	Weight kg
10	500	70.5	106	15	40	30	–	76	0.9
12	500	76.0	112	18	45	35	–	81	1.1
19(20)	450	78.0	114	23	50	40	–	86	1.5
25	400	90.0	133	59	–	–	60	66	2.5

Series 16 (fixed female – fixed female)

Steck-O DN	PN bar	A mm	L mm	h mm	H mm	B mm	SW mm	Hg mm	Weight kg
10	500	70.5	88	15	40	30	–	76	1.0
12	500	76.0	111	18	45	35	–	81	1.2
19 (20)	450	78.0	118	23	50	40	–	86	1.6
25	400	90.0	134	59	–	–	60	66	2.6

Example of order: Ball valve type SIBK-D of stainless steel with connector: Steck-O DN 25 female – male (Series 15) with safety locking handle **SIBK-D 25 15**

Parts list SIBK-D

Pos.	Designation	Material*
10	Body	Stainless steel
20	Fitting	Stainless steel
30	Ball	Stainless steel
40	Seal	POM
60	Stem	Stainless steel
70	Fitting	Brass
80	O-ring	NBR
90	Safety locking handle	Zinc die-casting
100	O-ring	NBR
110	Retaining nut	Brass
120	O-ring	NBR
130	O-ring	NBR
160	Spring	Stainless steel
170	O-ring	NBR
180	Supporting ring	POM

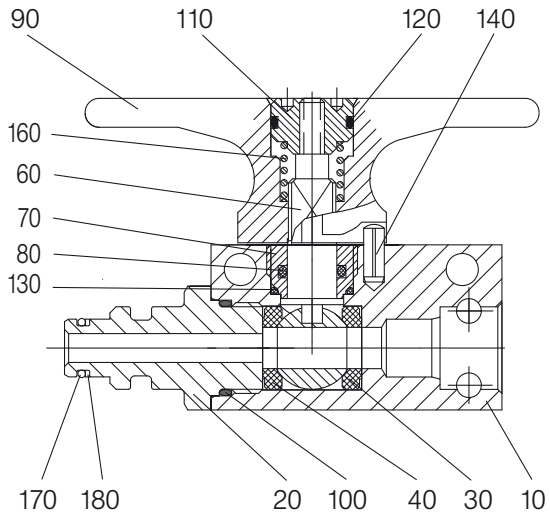

SIBK-D

*Standard (can vary according to nominal width), other materials on request.
Due to the design, not all items are used for all nominal widths.

High pressure block ball valve HBS-C, SIB-C, HBS-D, SIB-D, steel

With Steck-O connector

DN 06 - 31 (32) PN max. 500
DN 10 - DN 20 = swivelling female connector
DN 26 - DN 32 = fixed female connector

Also available as a stainless steel ball valve.

Series 15 – female - male connector
16 – female - female connector
17 – male – male connector

Temperature range Standard: -10°C to +90°C
On request: -50°C to +250°C

Range of use Liquids: Liquids group 2 according to PED 2014/68/EU Article 13
Gases: Liquids group 2 according to PED 2014/68/EU Article 13
As a matter of principle, the resistance to the flow medium must be ensured.

Technical specification Ball valves HBS-C, SIB-C, HBS-D and SIB-D are designed as ball valves with swivelling female connector (DN 10 - 20) with 2 screwed-in connectors in the body. The stem is fitted blowout-proof from the outside. Fast fitment in suitable HD line systems is possible by means of the male/female connection variant. With the safety locking handle (SIBK-C) option, apart from the one-sided lock in closed position, the positions can also be fixed on both sides. Also available with locking capability.

Safety locking handle– Choice of colours

Retaining nut

Red Silver Yellow Black

Retaining nut lockable and rotatable

Green Orange White Blue

Technical data
HBS-C, SIB-C, HBS-D, SIB-D

HBS-C
Connection 15

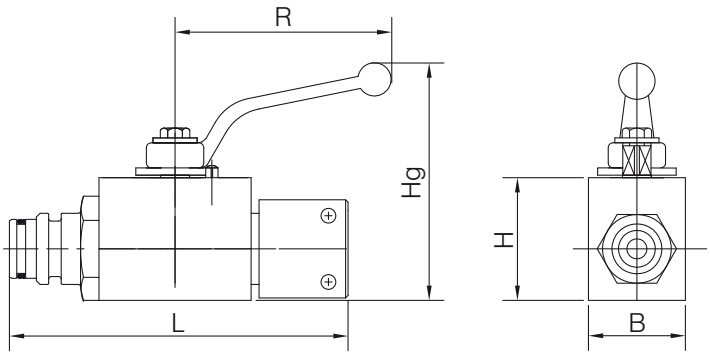

Connection 16

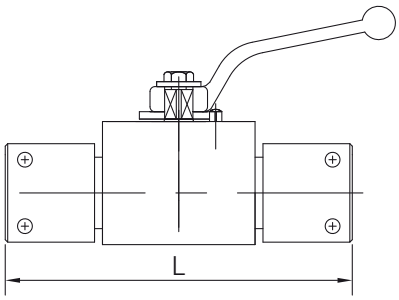

SIB-C

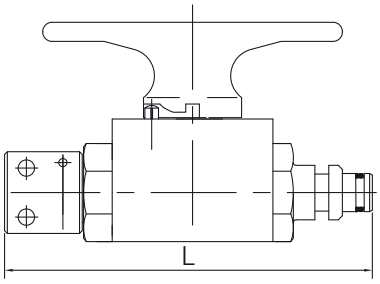

Series 15 (female – male)

Steck-O DN	PN bar	L mm	Female connector	B* mm	H mm	R mm	Hg mm	Weight kg
6	500	99	Fixed	25	30	76	61	0.70
10	500	117	Swivelling	35	45	130	70	0.80
12	500	117	Swivelling	35	45	130	70	0.80
19 (20)	450	117	Swivelling	35	45	130	70	1.06
25	400	151	Fixed	45	55	160	108	1.80
31 (32)	300	163	Fixed	55	65	160	113	2.30

Series 16 (female – female)

Steck-O DN	PN bar	L mm	Female connector	B* mm	H mm	R mm	Hg mm	Weight kg
6	500	84	Fixed	25	30	76	61	0.8
10	500	120	Swivelling	35	45	130	70	0.9
12	500	120	Swivelling	35	45	130	70	0.9
19 (20)	450	120	Swivelling	35	45	130	70	0.9
25	400	152	Fixed	45	55	160	108	1.8
31 (32)	300	161	Fixed	55	65	160	113	2.4

Series 17 (male – male)

Steck-O DN	PN bar	L mm	B* mm	H mm	R mm	Hg mm	Weight kg
6	500	114	25	30	76	61	0.7
10	500	114	35	45	130	70	0.8
12	500	114	35	45	130	70	0.9
19 (20)	450	114	35	45	130	70	1.0
25	400	150	45	55	160	108	1.7
31 (32)	300	165	55	65	160	113	1.8

*Deviating dimensions in stainless steel.

Example of order: Ball valve type HBS-C made of steel with connector: Steck-O DN 12 male – swivelling female (series 15) with hand lever
HBS-C 12 15

Parts list		HBS-C	HBS-D
Pos.	Designation	Material*	Material*
10	Body	Steel	Stainless steel
12	Sleeve	Steel	
13	Wire		
20	Fitting	Steel	Stainless steel
21	O-ring	NBR	NBR
22	Supporting ring	POM	POM
25	Fitting	Steel	Stainless steel
30	Ball	Steel	Stainless steel
40	Seal	POM	POM
50	Stop washer	Steel	Stainless steel
60	Stem	Steel	Stainless steel
70	Fitting	Brass	
80	O-ring	NBR	NBR
90	Hand lever	Zinc die-casting	Zinc die-casting
100	O-ring	NBR	NBR
110	Bolt		
120	Washer		
130	O-ring	NBR	NBR
140	Stop pin		

*Standard (can vary according to nominal width), other materials on request.

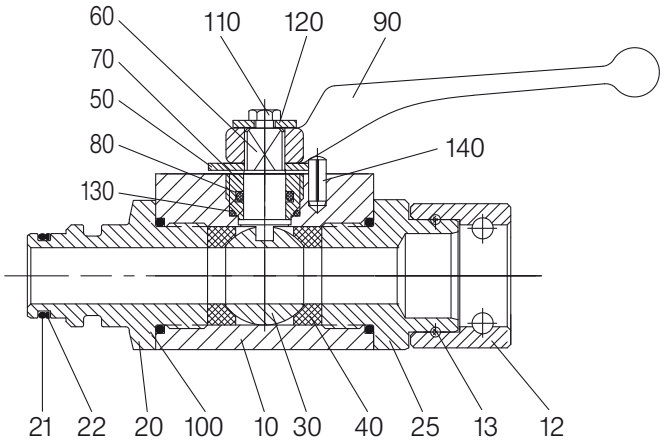

HBS-C

Parts list		SIB-C	SIB-D
Pos.	Designation	Material*	Material*
10	Body	Steel	Stainless steel
20	Fitting	Steel	Stainless steel
30	Ball	Steel	Stainless steel
40	Seal	POM	POM
60	Stem	Stainless steel	Stainless steel
70	Fitting	Brass	Brass
80	O-ring	NBR	NBR
90	Safety locking handle	Zinc die-casting	Zinc die-casting
100	O-ring	NBR	NBR
110	Retaining nut	Brass	Brass
120	O-ring	NBR	NBR
130	O-ring	NBR	NBR
140	Stop pin		
160	Spring	Stainless steel	Stainless steel

*Standard (can vary according to nominal width), other materials on request.
Due to the design, not all items are used for all nominal widths.

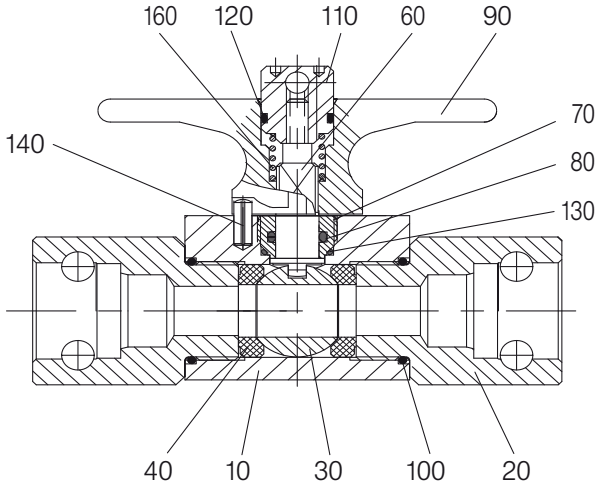

SIB-C

Please ask separately, where requirements exceed the standard conditions of use listed in this data sheet.
As a matter of principle, the operating and maintenance instructions, in particular the safety instructions must be observed!
Operating and maintenance instructions as well as the approval certificates can be downloaded at www.von-scheven.de.

We reserve the right to carry out technical modifications.

High pressure ball valve HKS-C, steel

With swivelling Steck-O connector

DN 10 - 19 (20) PN max. 500

Series 15 – female - male connector
16 – female - female connector

Temperature range Standard: -10°C to +90°C
On request: -50°C to +250°C

Range of use Liquids: Liquids group 2 according to PED 2014/68/EU Article 13
Gases: Liquids group 2 according to PED 2014/68/EU Article 13
As a matter of principle, the resistance to the flow medium must be ensured.

Technical specification Ball valve HKS-C is designed as a ball valve with swivelling female connector and with one screwed-in connector. The stem is fitted blowout-proof from the outside. Fast fitment in suitable HD line systems is possible by means of the male/female connection variant.

Please ask separately, where requirements exceed the standard conditions of use listed in this data sheet.
As a matter of principle, the operating and maintenance instructions, in particular the safety instructions must be observed!
Operating and maintenance instructions as well as the approval certificates can be downloaded at www.von-scheven.de.

We reserve the right to carry out technical modifications.

5.040 EN 08/17

Technical data HKS-C

Connection 15

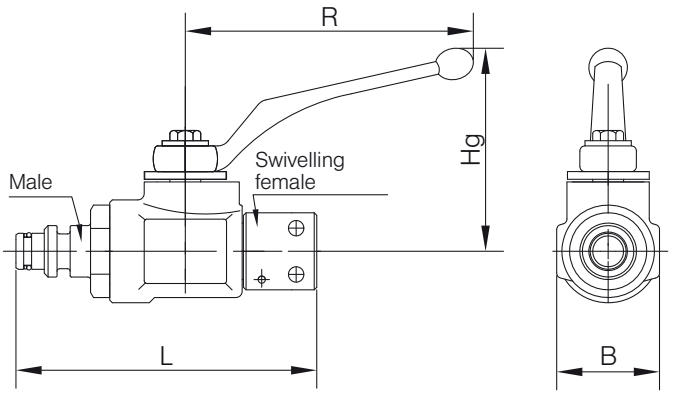

Connection 16

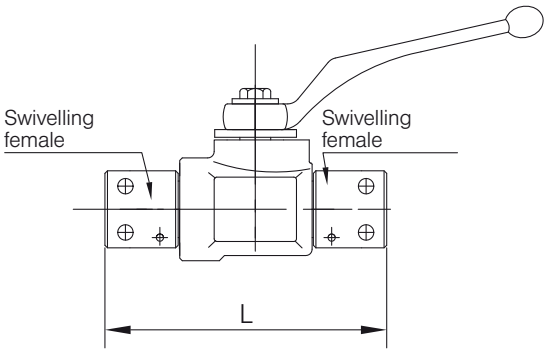

Series 15 (swivelling female – male)

Steck-O DN	PN bar	L mm	B mm	R mm	Hg mm	Weight kg
10	500	117	40	130	70	0.8
12	500	117	40	130	70	0.8
19 (20)	450	117	40	130	70	1.0

Series 16 (swivelling female – swivelling female)

Steck-O DN	PN bar	L mm	B mm	R mm	Hg mm	Weight kg
10	500	120	40	130	70	0.9
12	500	120	40	130	70	1.0
19 (20)	450	120	40	130	70	1.1

Example of order: Ball valve type HKS-C made of steel with connector: Steck-O DN 12 male – swivelling female (series 15) with hand lever **HKS-C 12 15**

Parts list HKS-C

Pos.	Designation	Material*
10	Body	Steel
12	Sleeve	Steel
13	Wire	
20	Fitting	Steel
21	O-ring	NBR
22	Supporting ring	POM
30	Ball	Steel
40	Seal	POM
50	Stop washer	Steel
60	Stem	Steel
70	Fitting	Brass
80	O-ring	NBR
90	Hand lever	Zinc die-casting
100	O-ring	NBR
110	Bolt	
120	Washer	
130	O-ring	NBR
140	Stop pin	

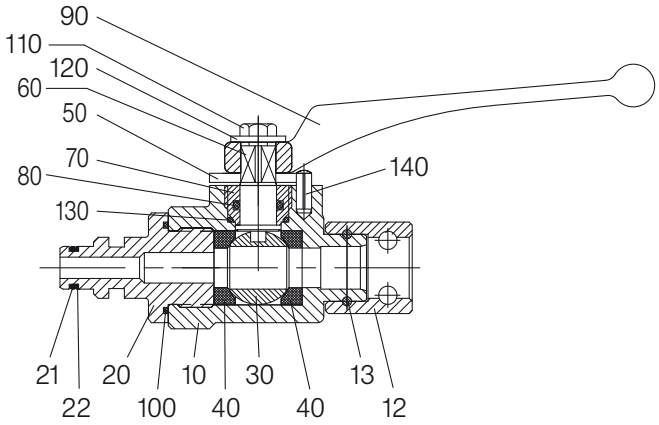

*Standard (can vary according to nominal width), other materials on request.
Due to the design, not all items are used for all nominal widths.

High pressure ball valve SI-C, steel

With swivelling Steck-O connector

DN 10 - 19 (20) PN max. 500

Series 15 – female - male connector
16 – female - female connector

Temperature range Standard: -10°C to +90°C
On request: -50°C to +250°C

Range of use Liquids: Liquids group 2 according to PED 2014/68/EU Article 13
Gases: Liquids group 2 according to PED 2014/68/EU Article 13
As a matter of principle, the resistance to the flow medium must be ensured.

Technical specification Ball valve SI-C is designed as a ball valve with swivelling female connector and with one screwed-in connector.
The stem is fitted blowout-proof from the outside. Fast fitment in suitable HD line systems is possible by means of the male/female connection variant.
With the safety locking handle (SIBK-C) option, apart from the one-sided lock in closed position, the positions can also be fixed on both sides. Also available with locking capability.

Safety locking handle– Choice of colours

Retaining nut

Red | Silver | Yellow | Black

Retaining nut lockable and rotatable

Green | Orange | White | Blue

Please ask separately, where requirements exceed the standard conditions of use listed in this data sheet.
As a matter of principle, the operating and maintenance instructions, in particular the safety instructions must be observed!
Operating and maintenance instructions as well as the approval certificates can be downloaded at www.von-scheven.de.

We reserve the right to carry out technical modifications.

5.050 EN 08/17

Technical data SI-C

Connection 15

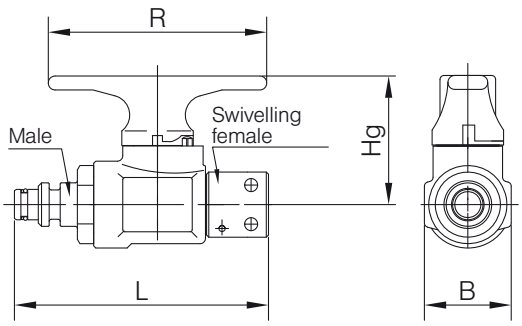

Connection 16

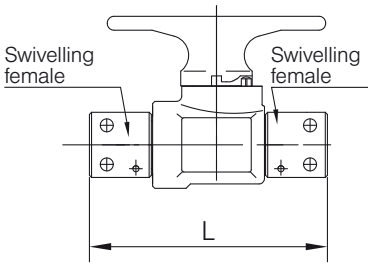

Series 15 (swivelling female – male)

Steck-O DN	PN bar	L mm	B mm	R mm	Hg mm	Weight kg
10	500	111	40	110	62	0.8
12	500	117	40	110	62	0.8
19 (20)	450	118	40	110	62	1.0

Series 16 (swivelling female – swivelling female)

Steck-O DN	PN bar	L mm	B mm	R mm	Hg mm	Weight kg
10	500	120	40	110	62	0.9
12	500	120	40	110	62	0.9
19 (20)	450	120	40	110	62	1.1

Example of order: Ball valve type SI-C made of steel with connector: Steck-O DN 12 male – swivelling female (series 15) with safety shut-off handle **SI-C 12 15**

Parts list SI-C

Pos.	Designation	Material*
10	Body	Steel
20	Fitting	Steel
24	Wire	
21	O-ring	NBR
22	Supporting ring	POM
25	Sleeve	Steel
30	Ball	Steel
40	Seal	POM
60	Stem	Steel
70	Fitting	Brass
80	O-ring	NBR
90	Safety locking handle	Zinc die-casting
100	O-ring	NBR
110	Retaining nut	Brass
120	O-ring	NBR
130	O-ring	NBR
140	Stop pin	
150	Spring	Stainless steel

*Standard (can vary according to nominal width), other materials on request.
Due to the design, not all items are used for all nominal widths.

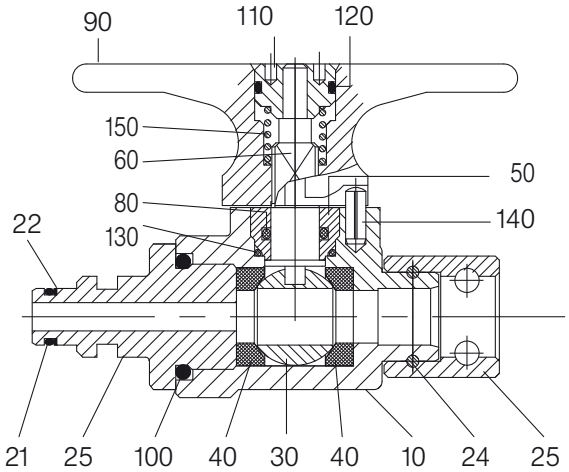

High pressure ball valve HKS-C, HKS-D, steel

With Steck-O connector

DN 38 (40) - 80 PN max. 145

Also available as a stainless steel ball valve.

Series
15 – female - male connector
16 – female - female connector

Temperature range
Standard: -10°C to + 90°C
On request: -50°C to + 230°C

Range of use
Liquids: Liquids group 2 according to PED 2014/68/EU Article 13
As a matter of principle, the resistance to the flow medium must be ensured.

Technical specification
HKS-C and HKS-D ball valves are designed as ball valves with fixed female connector. The stem is fitted blowout-proof. Fast fitment in suitable HD line systems is possible by means of the male/female connection variant.

Please ask separately, where requirements exceed the standard conditions of use listed in this data sheet.
As a matter of principle, the operating and maintenance instructions, in particular the safety instructions must be observed!
Operating and maintenance instructions as well as the approval certificates can be downloaded at www.von-scheven.de.

We reserve the right to carry out technical modifications.

5.055 EN 08/17

Technical data HKS-C, HKS-D

Connection 15

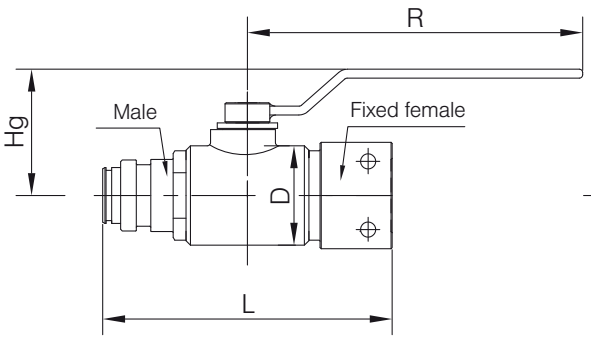

Connection 16

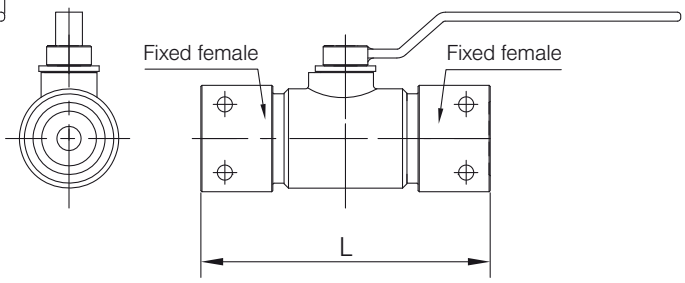

Series 15 (fixed female – male)

Steck-O DN	PN bar	L mm	D mm	R mm	Hg mm	Weight kg
38 (40)	145	189	Ø 76	250	117	4.4
51 (50)	130	200	Ø 90	300	121	6.0
63 (65)	70	272	Ø133	300	150	15.0
80	40	278	Ø155	350	182	25.0

Series 16 (fixed female both sides)

Steck-O DN	PN bar	L mm	D mm	R mm	Hg mm	Weight kg
38 (40)	145	190	Ø 76	250	117	6.0
51 (50)	130	200	Ø 90	300	120	8.0
63 (65)	70	270	Ø133	300	150	17.0
80	40	276	Ø155	350	182	27.0

Example of order: Ball valve type HKS-C of steel with connector: Steck-O DN 80 female – male (series 15) with hand lever **HKS-C 80 15**

Parts list

Pos.	Designation	HKS-C Material*	HKS-D Material*
10	Body	Steel	Stainless steel
20	Fitting	Steel	Stainless steel
21	O-ring	NBR	NBR
22	Supporting ring	POM	POM
25	Fitting	Steel	Stainless steel
30	Ball	Steel	Stainless steel
40	Seal	POM	POM
50	Stop washer	Steel	Stainless steel
60	Stem	Steel	Stainless steel
80	O-ring	NBR	NBR
90	Hand lever	Steel	Steel
100	O-ring	NBR	NBR
110	Bolt		
130	Sliding disk	PTFE	PTFE
140	Stop pin		

*Standard (can vary according to nominal width), other materials on request.
Due to the design, not all items are used for all nominal widths.

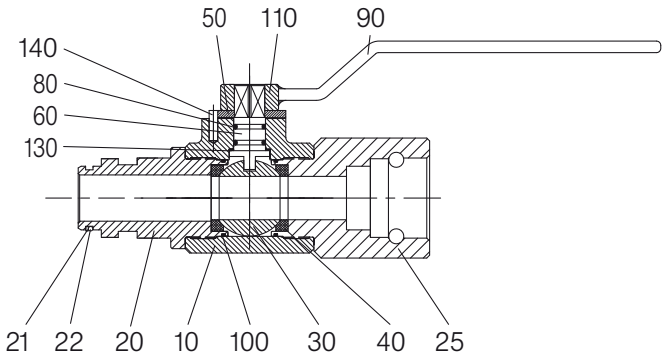

High pressure ball valve HBS-C, SIB-C, HBS-D, SIB-D, steel

With Super-Steck-O connector

DN 12 - 31 (32) PN max. 500

Also available in stainless steel.

Series 15-SS – female - male connector
16-SS – female - female connector

Temperature range Standard: -10°C to +90°C
On request: -50°C to +250°C

Range of use Liquids: Liquids group 2 according to PED 2014/68/EU Article 13
Gases: Liquids group 2 according to PED 2014/68/EU Article 13
As a matter of principle, the resistance to the flow medium must be ensured.

Technical specification Ball valves HBS-C, SIB-C, HBS-D and SIB-D are designed with 2 screwed-in connectors in the body. The stem is fitted blowout-proof up to DN 25 from the outside. Fast fitment in suitable HD line systems is possible by means of the male/female connection variant. With the safety locking handle (SIBK-C) option, apart from the one-sided lock in closed position, the positions can also be fixed on both sides. Also available with locking capability.

Safety locking handle– Choice of colours

Retaining nut

Red Silver Yellow Black

Retaining nut lockable and rotatable

Green Orange White Blue

Technical data HBS-C, SIB-C, HBS-D, SIB-D

HBS-C
Connection 15

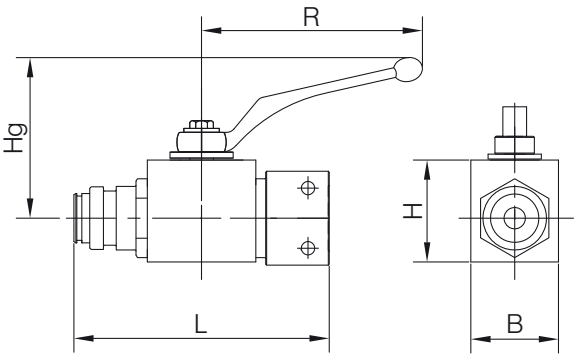

Connection 16

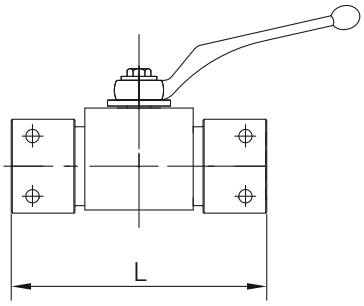

SIB-C

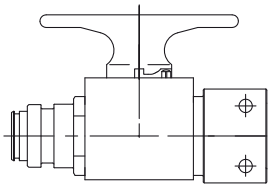

Series 15-SS (fixed female – male)

Steck-O DN	PN bar	L mm	B* mm	H mm	R mm	Hg mm	Weight kg
12–SS	500	130	35	45	130	70	1.0
19 (20)–SS	500	153	40	50	130	70	1.2
25–SS	500	201	55	65	160	83	2.0
31 (32)–SS	420	207	55	65	160	83	2.5

*Deviating dimensions in stainless steel.

Series 16-SS (fixed female – fixed female)

Steck-O DN	PN bar	L mm	B* mm	H mm	R mm	Hg mm	Weight kg
12–SS	500	115	35	45	130	70	1.2
19 (20)–SS	500	145	40	50	130	70	1.5
25–SS	500	191	55	65	160	83	2.3
31 (32)–SS	420	205	55	65	160	83	2.8

*Deviating dimensions in stainless steel.

Example of order: Ball valve type HKS-C made of steel with connector: Super-Steck-O DN 25 female – male (series 15) with hand lever
HBS-C 2515-SS

Parts list		HBS-C	HBS-D
Pos.	Designation	Material*	Material*
10	Body	Steel	Stainless steel
20	Fitting	Steel	Stainless steel
21	O-ring	NBR	NBR
22	Supporting ring	POM	POM
25	Fitting	Steel	Stainless steel
30	Ball	Steel	Stainless steel
40	Seal	POM	POM
50	Stop washer	Steel	Stainless steel
60	Stem	Steel	Stainless steel
70	Fitting	Brass	
80	O-ring	NBR	NBR
90	Hand lever	Zinc die-casting	Zinc die-casting
100	O-ring	NBR	NBR
110	Bolt		
120	Washer		
130	O-ring	NBR	NBR
140	Stop pin		

*Standard (can vary according to nominal width), other materials on request.

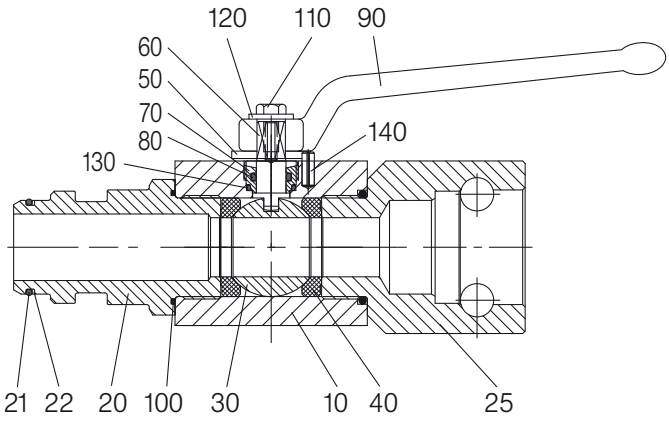

HBS-C

Parts list		SIB-C	SIB-D
Pos.	Designation	Material*	Material*
10	Body	Steel	Stainless steel
20	Fitting	Steel	Stainless steel
30	Ball	Steel	Stainless steel
40	Seal	POM	POM
60	Stem	Stainless steel	Stainless steel
70	Fitting	Brass	Brass
80	O-ring	NBR	NBR
90	Safety locking handle	Zinc die-casting	Zinc die-casting
100	O-ring	NBR	NBR
110	Retaining nut	Brass	Brass
120	O-ring	NBR	NBR
130	O-ring	NBR	NBR
140	Stop pin		
160	Spring	Stainless steel	Stainless steel

*Standard (can vary according to nominal width), other materials on request.
Due to the design, not all items are used for all nominal widths.

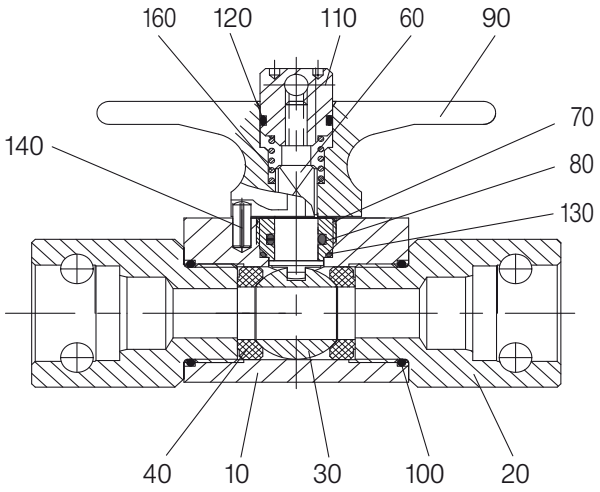

SIB-C

Please ask separately, where requirements exceed the standard conditions of use listed in this data sheet.
As a matter of principle, the operating and maintenance instructions, in particular the safety instructions must be observed!
Operating and maintenance instructions as well as the approval certificates can be downloaded at www.von-scheven.de.

We reserve the right to carry out technical modifications.

High pressure ball valve HKS-C, HKS-D, steel

With Super-Steck-O connector

DN 38 (40) and DN 51 (50) PN max. 420

Also available as a stainless steel ball valve.

Series
15-SS – female - male connector
16-SS – female - female connector

Temperature range
Standard: -10°C to +90°C;
On request: -50°C to +250°C

Range of use
Liquids: Liquids group 2 according to PED 2014/68/EU Article 13
As a matter of principle, the resistance to the flow medium must be ensured.

Technical specification
Ball valves HKS-C and HKS-D are designed with 2 screwed-in connectors in the body. The stem is fitted blowout-proof. Fast fitment in suitable HD line systems is possible by means of the male/female connection variant.

Please ask separately, where requirements exceed the standard conditions of use listed in this data sheet.
As a matter of principle, the operating and maintenance instructions, in particular the safety instructions must be observed!
Operating and maintenance instructions as well as the approval certificates can be downloaded at www.von-scheven.de.

We reserve the right to carry out technical modifications.

5.065 EN 08/17

Technical data HKS-C, HKS-D

Connection 15

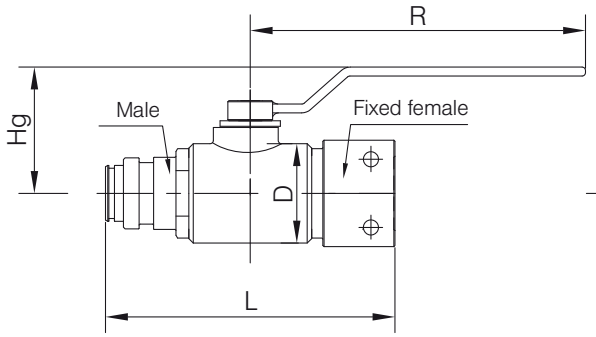

Connection 16

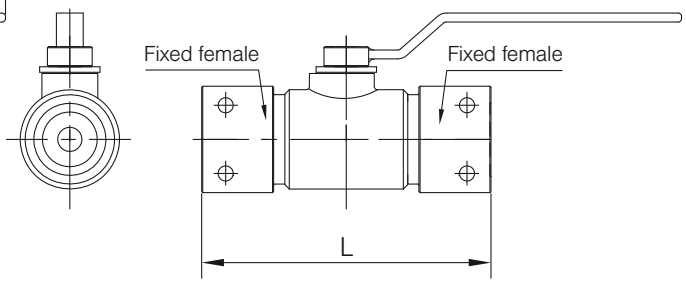

Series 15-SS (fixed female – male)

Steck-O DN	PN bar	L mm	D mm	R mm	Hg mm	Weight kg
38 (40)–SS	420	235	Ø 76	300	117	6.0
51 (50)–SS	420	259	Ø 90	300	121	8.7

Series 16-SS (fixed female – fixed female)

Steck-O DN	PN bar	L mm	D mm	R mm	Hg mm	Weight kg
38 (40)–SS	420	230	Ø 76	300	117	7.0
51 (50)–SS	420	263	Ø 90	300	121	9.7

Example of order: Ball valve type HKS-C made of steel with connector: Super-Steck-O DN 38 female – male (series 15) with hand lever **HKS-C 40 15-SS**

Parts list

Pos.	Designation	HKS-C Material*	HKS-D Material*
10	Body	Steel	Stainless steel
20	Fitting	Steel	Stainless steel
21	O-ring	NBR	NBR
22	Supporting ring	POM	POM
25	Fitting	Steel	Stainless steel
30	Ball	Steel	Stainless steel
40	Seal	POM	POM
50	Stop washer	Steel	Stainless steel
60	Stem	Steel	Stainless steel
80	O-ring	NBR	NBR
90	Hand lever	Steel	Steel
100	O-ring	NBR	NBR
110	Bolt		
130	Sliding disk	PTFE	PTFE
140	Stop pin		

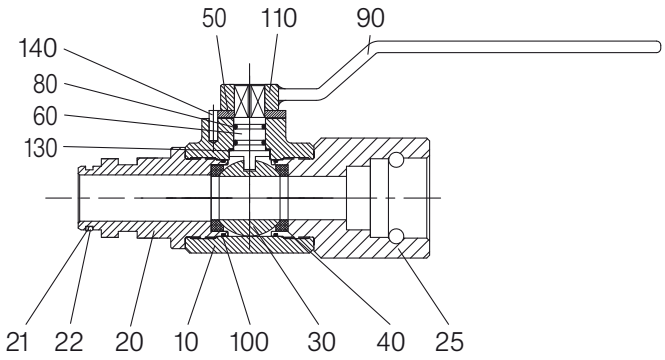

*Standard (can vary according to nominal width), other materials on request.
Due to the design, not all items are used for all nominal widths.

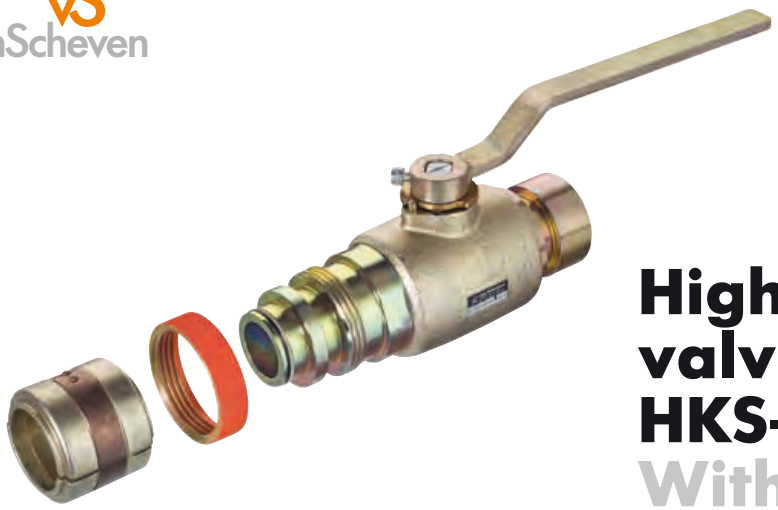

High pressure ball valve HKS-C, SIB-C, HKS-D, SIB-D, steel

With SSKV connector

DN 10 - 100 PN max. 445

Also available as a stainless steel ball valve.

Series 37 – SSKV female – SSKV male connectors
38 – SSKV female – SSKV male connectors

Temperature range Standard: -10°C to +90°C
On request: -50°C to +250°C

Range of use Liquids: Liquids group 2 according to PED 2014/68/EU Article 13
As a matter of principle, the resistance to the flow medium must be ensured.

Technical specification The ball valves are designed with SSKV male and SSKV female with 2 screwed-in connectors in the body. The stem is fitted blowout-proof. Fast fitment in suitable HD line systems is possible by means of the SSKV female/male connection variant.
With the safety locking handle (SIB type up to DN 31) option, apart from the one-sided lock in closed position, the positions can also be fixed on both sides.
Also available with locking capability.

Optional SI handle, DN 10 – 32 type SIB

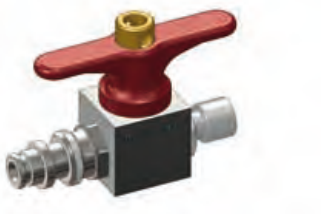

Safety locking handle– Choice of colours

Retaining nut

Red Silver Yellow Black

Retaining nut lockable and rotatable

Green Orange White Blue

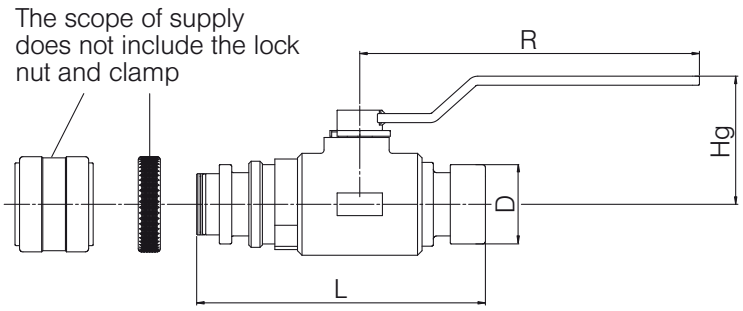

Series 37 (SSKV female connector – SSKV male connector)

SSKV-DN	D mm	PN bar	L mm	R mm	Hg mm
10	20.0	445	117	112	77
12	22.0	275		112	77
12	24.0	415	122	112	77
19 (20)	28.0	350		130	67
19 (20)	30.0	420	148	130	67
25	33.0	320	151	130	71
25	36.0	420	160	130	71
31 (32)	39.8	210	188	160	82
31 (32)	44.0	420	199	160	82
38 (40)	53.0	185	217	300	110
38 (40)	54.0	420	222	300	110
51 (50)	65.0	175	223	300	113
51 (50)	70.0	345	255	300	113
63 (65)	84.0	350		300	
63 (65)	75.0	70		300	
80	99.3	70	337	350	182
100	118.0	64	395	350	182

Example of order: Ball valve type SIB-C 1037 made of steel with connector SSKV DN 12 female – male (series 37) with safety locking handle (where necessary also quote dimension D)
SIB-C 10 37

Parts list		HKS-C	HKS-D
Pos.	Designation	Material*	Material*
10	Body	Steel	Stainless steel
20	Fitting	Steel	Stainless steel
21	O-ring	NBR	NBR
22	Supporting ring	POM	POM
25	Fitting	Steel	Stainless steel
30	Ball	Steel	Stainless steel
40	Seal	POM	POM
50	Stop washer	Steel	Stainless steel
60	Stem	Steel	Stainless steel
80	O-ring	NBR	NBR
90	Hand lever	Steel	Steel
100	O-ring	NBR	NBR
110	Bolt		
130	Sliding disk	PTFE	PTFE
140	Stop pin		

*Standard (can vary according to nominal width), other materials on request.

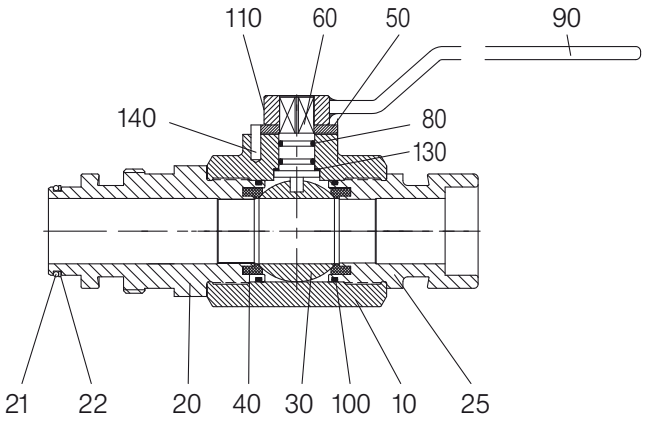

DN 38-100 mm **HKS-C**

Parts list		SIB-C	SIB-D
Pos.	Designation	Material*	Material*
10	Body	Steel	Stainless steel
20	Fitting	Steel	Stainless steel
21	O-ring	NBR	NBR
22	Supporting ring	POM	POM
25	Fitting	Steel	Stainless steel
30	Ball	Steel	Stainless steel
40	Seal	POM	POM
60	Stem	Stainless steel	Stainless steel
70	Fitting	Brass	Brass
80	O-ring	NBR	NBR
90	Safety locking handle	Zinc die-casting	Zinc die-casting
100	O-ring	NBR	NBR
110	Retaining nut	Brass	Brass
120	O-ring	NBR	NBR
130	O-ring	NBR	NBR
140	Stop pin		
160	Spring	Stainless steel	Stainless steel

*Standard (can vary according to nominal width), other materials on request.
Due to the design, not all items are used for all nominal widths.

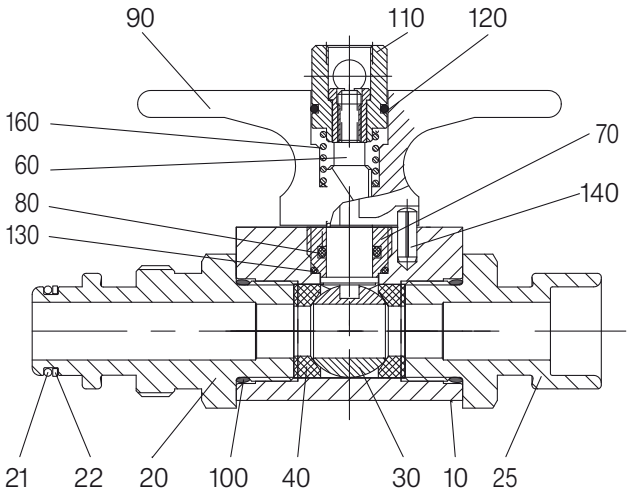

DN 10 - 31 mm **SIB-C**

Please ask separately, where requirements exceed the standard conditions of use listed in this data sheet.
As a matter of principle, the operating and maintenance instructions, in particular the safety instructions must be observed!
Operating and maintenance instructions as well as the approval certificates can be downloaded at www.von-scheven.de.

We reserve the right to carry out technical modifications.

3-way changeover ball valve DBS-C, DBS-D, steel

With Steck-O female

DN 10 - 31 (32) PN to 500

Also available as a stainless steel ball valve.

Series 16 – all-round female connector DIN 20043

Temperature range Standard: -10°C to +90°C
On request: -50°C to +230°C

Range of use Liquids: Liquids group 2 according to PED 2014/68/EU Article 13
Gases: Liquids group 2 according to PED 2014/68/EU Article 13
As a matter of principle, the resistance to the flow medium must be ensured.

Technical specification The DBS-C and DBS-D type ball valves consist of a block body with connector screwed in on both sides. The stem is fitted blowout-proof. Actuators can be attached by means of an extension kit. This retrofit requirement must be specified when placing the order (additional charge).

Please ask separately, where requirements exceed the standard conditions of use listed in this data sheet.
As a matter of principle, the operating and maintenance instructions, in particular the safety instructions must be observed!
Operating and maintenance instructions as well as the approval certificates can be downloaded at www.von-scheven.de.

We reserve the right to carry out technical modifications.

5.080 EN 08/17

Technical data DBS-C, DBS-D

Ball holes

L-form **T-form**

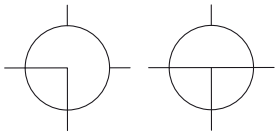

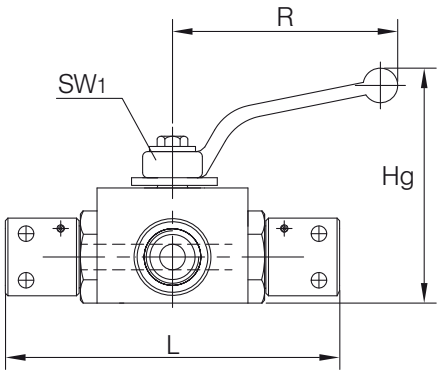

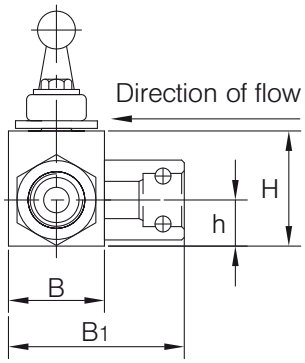

Series 16 (all-round female connector DIN 20043)

Steck-O DN	PN bar	L mm	B* mm	B1* mm	H mm	h mm	Hg mm	R mm	SW1 mm	Weight kg
10	500	84	35	56	40	15	92	112	10	0.6
12	500	116	35	65	45	18	80	130	10	0.9
19 (20)	450	130	45	70	55	24	85	130	10	1.4
25	400	152	55	161	65	30	95	160	10	2.4
31 (32)	300	160	55	110	65	30	111	160	10	2.6

*Deviating dimensions in stainless steel.

Example of order: DBS-C type ball valve made of steel, with all-round female connector DN 10 with L-bore (please state ball hole form) **DBS-C 10 16-L**

Parts list

Pos.	Designation	DBS-C Material*	DBS-D Material*
10	Body	Steel	Stainless steel
20	Fitting	Steel	Stainless steel
30	Ball	Steel	Stainless steel
40	Seal	POM	POM
50	Stop washer		
60	Stem	Steel	Stainless steel
70	Fitting	Brass	
80	O-ring	NBR	NBR
90	Hand lever	Zinc die-casting	Zinc die-casting
100	O-ring	NBR	NBR
110	Bolt		
120	Washer		
130	O-ring	NBR	NBR
140	Stop pin		

*Standard (can vary according to nominal width), other materials on request.
Due to the design, not all items are used for all nominal widths.

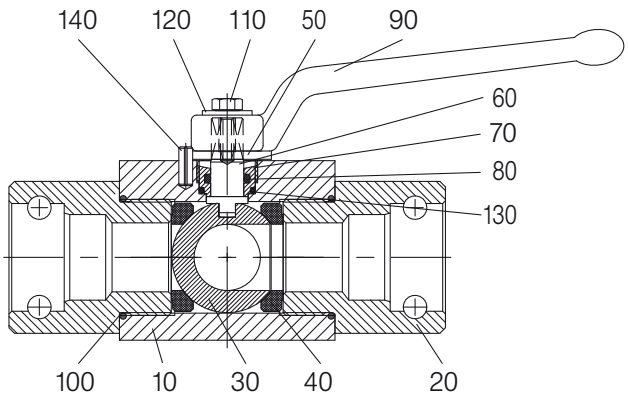

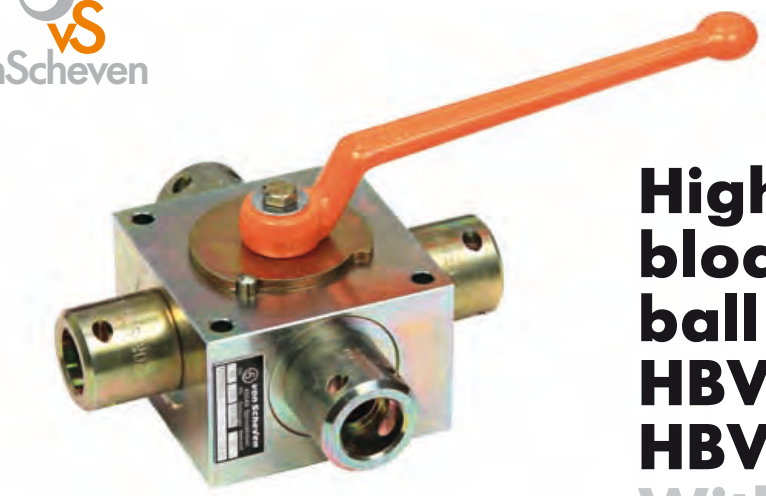

High pressure block multiway ball valve HBDS-C, HBVS-C, HBDS-D, HBVS-D, steel

With Steck-O female

DN 10-25 PN max. 400

Also available as a stainless steel ball valve.

Series 16 – all-round female connector DIN 20043

Temperature range Standard: -10°C to +90°C
On request: -50°C to +250°C

Range of use Liquids: Liquids group 2 according to PED 2014/68/EU Article 13
Gases: Liquids group 2 according to PED 2014/68/EU Article 13
As a matter of principle, the resistance to the flow medium must be ensured.

Technical specification HBDS-C, HBVS-C, HBDS-D and HBVS-D type ball valves consist of a block body with screwed-in connectors. Actuators can be attached by means of an extension kit. This retrofit requirement must be specified when placing the order (additional charge).

Please ask separately, where requirements exceed the standard conditions of use listed in this data sheet.
As a matter of principle, the operating and maintenance instructions, in particular the safety instructions must be observed!
Operating and maintenance instructions as well as the approval certificates can be downloaded at www.von-scheven.de.

We reserve the right to carry out technical modifications.

5.090 EN 08/17

Technical data HBDS-C, HBVS-C, HBDS-D, HBVS-D

Ball holes

L-form **T-form** **X-form**

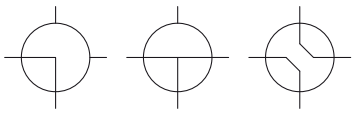

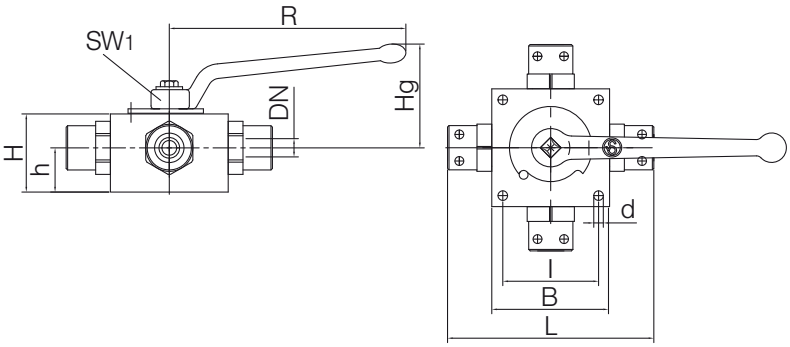

Series 16

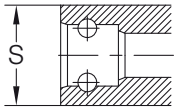

Series 16 (with female connector DIN 20043)

Steck-O DN	PN bar	S mm	L mm	l mm	B mm	d mm	H mm	h mm	Hg mm	R mm	SW1 mm	Weight kg
10	400	32	150	65	80	6.5	53	30.0	103	160	10	2.6
12	400	36	160	65	80	6.5	60	30.0	103	160	10	3.0
19 (20)	320	40	170	80	100	9.0	60	35.0	122	250	17	4.4
25	250	55	208	85	106	9.0	72	42.5	126	350	22	5.8

Example of order: HBDS-C type three-way ball valve made of steel, with female connector DN 12 according to DIN 20043 and ball hole in T-form **HBDS-C 12 16-T**

Parts list

Pos.	Designation	Steel Material	Stainless steel Material
10	Body	Steel	Stainless steel
20	Fitting	Steel	Stainless steel
30	Ball	Steel	Stainless steel
40	Sealing piston	POM/brass	POM/brass
60	O-ring	NBR	NBR
70	O-ring	NBR	NBR
80	Fitting	Steel	Stainless steel
90	O-ring	NBR	NBR
100	Hand lever	Zinc die-casting	Zinc die-casting
110	O-ring	NBR	NBR
120	Stop washer	Steel	Stainless steel
140	Stop pin		
160	Supporting ring	PTFE	PTFE
200	Blanking plug	Steel	Stainless steel

*Standard (can vary according to nominal width), other materials on request.
Due to the design, not all items are used for all nominal widths.

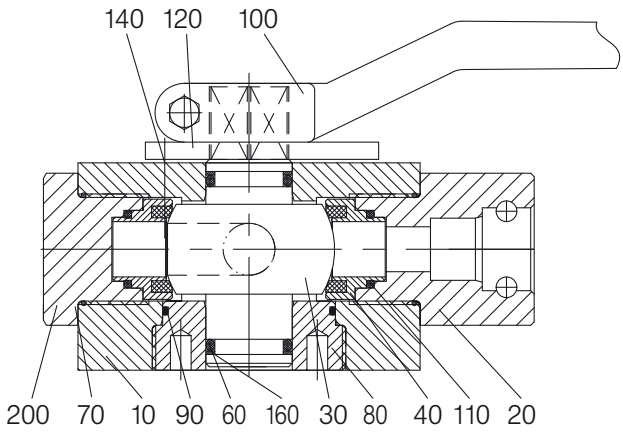

Low pressure mining ball valve MKA-C, steel

With male pipe thread

DN 10 - 50 PN max. 100

Series MKA
05 – Pipe thread DIN 259 with lock nut – pipe thread DIN 259 with taper
10 – Pipe thread DIN 259 with lock nut – round thread DIN 20029 with taper

Temperature range
Standard: -10°C to +90°C
On request: -50°C to +250°C

Range of use
Liquids: Liquids group 2 according to PED 2014/68/EU Article 13
Gases: Liquids group 2 according to PED 2014/68/EU Article 13
As a matter of principle, the resistance to the flow medium must be ensured.

Technical specification
Ball valve MKA-C is specially developed for use in low pressure applications. A male pipe thread is integrated in the housing, whilst a round thread or a male pipe thread with internal taper is screwed in as a connector. The stem is fitted blowout-proof. Hoses or pipeline components can be countered with the standard lock nut.

Please ask separately, where requirements exceed the standard conditions of use listed in this data sheet.
As a matter of principle, the operating and maintenance instructions, in particular the safety instructions must be observed!
Operating and maintenance instructions as well as the approval certificates can be downloaded at www.von-scheven.de.

We reserve the right to carry out technical modifications.

5.100 EN 08/17

Technical data MKA-C

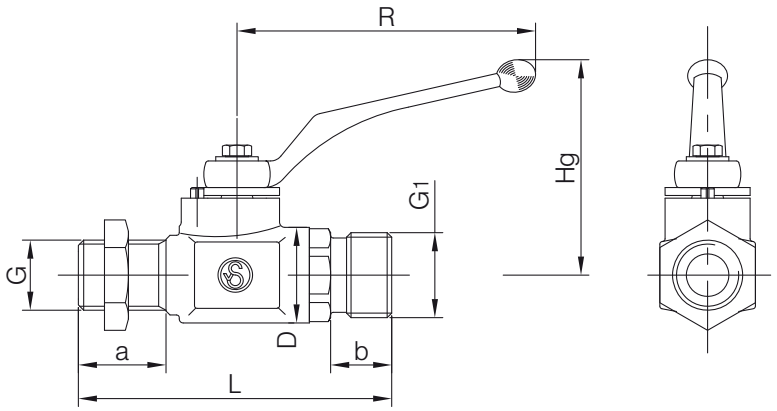

Series 05 (Pipe thread DIN 259 with lock nut – pipe thread DIN 259 with taper)

DN mm	PN bar	G	G1	L mm	D mm	a mm	b mm	R mm	Hg mm	Weight kg
12	100	3/4"	3/4" K1:4	118	36	33	25	113	73	0.6
20	63	1"	1" K1:2.5	127	41	38	22	130	70	0.9

Series 10 (Pipe thread DIN 259 with lock nut – round thread DIN 20029 with taper)

DN mm	PN bar	G	G1	L mm	D mm	a mm	b mm	R mm	Hg mm	Weight kg
10	100	1/2"	Rd 32x1/8"	116	36	28	23	113	79	0.6
12	100	3/4"	Rd 32x1/8"	116	36	33	23	113	79	0.6
16	100	3/4"	Rd 32x1/8"	118	36	33	23	113	81	0.7
20	63	1"	Rd 32x1/8"	122	36	38	23	130	89	0.9
20	63	1"	Rd 38x1/8"	132	41	38	26	130	70	1.0
25	63	1 1/4"	Rd 38x1/8"	144	50	41	26	130	74	1.4
25	63	1 1/4"	Rd 46x1/6"	149	50	41	30	130	74	1.4
32	25	1 1/2"	Rd 55x1/6"	187	75	45	32	250	117	4.1
40	25	2"	Rd 62x1/6"	196	80	48	35	250	121	4.3
40	25	2"	Rd 75x1/6"	199	80	48	41	250	121	4.7
50	16	2 1/2"	Rd 75x1/6"	205	95	50	41	250	128	5.6
50	16	2 1/2"	Rd 90x1/6"	216	95	50	49	250	128	6.1

Example of order: MKA-C type ball valve of steel, DN 16, with pipe thread DIN 259 3/4" with lock nut and with round thread DIN 20029 round 32 x 1/8" with taper 1:3 (for round thread, please also quote dimension G1!)
MKA-C 1610

Parts list MKA-C

Pos.	Designation	Material
10	Body	Steel
20	Fitting	Steel
30	Ball	Steel
40	Seal	NBR
50	Stop washer	Steel
60	Stem	Brass
70	Fitting	Brass
80	O-ring	NBR
90	Hand lever	Zinc die-casting
100	O-ring	NBR
110	Bolt	
120	Washer	
130	O-ring	NBR
140	Stop pin	
150	Reinforcing ring	Polyamide
160	lock nut	Steel

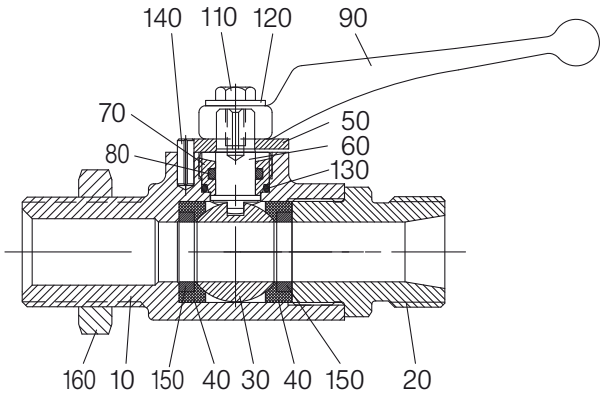

*Standard (can vary according to nominal width), other materials on request.
Due to the design, not all items are used for all nominal widths.

DN 50 to DN 100

DN 25 to DN 80

High pressure mining ball valve HKA-C, steel

For solid and liquid media

DN 25 - 100 PN max. 500

Range of use Liquids: Liquids group 2 according to PED 2014/68/EU Article 13
As a matter of principle, the resistance to the flow medium must be ensured.

Please ask separately, where requirements exceed the standard conditions of use listed in this data sheet.
As a matter of principle, the operating and maintenance instructions, in particular the safety instructions must be observed!
Operating and maintenance instructions as well as the approval certificates can be downloaded at www.von-scheven.de.

We reserve the right to carry out technical modifications.

5.110 EN 08/17

Clamp coupling (Series 39)

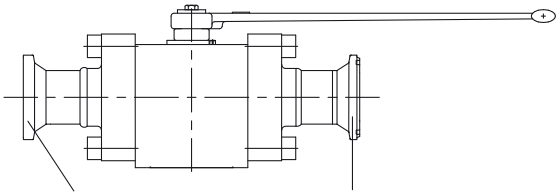

Spring shackle Groove shackle

Screw coupling (Series 72)

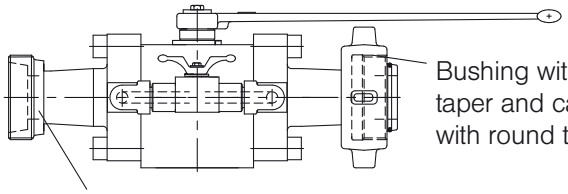

Round male thread

Series 39 (clamp coupling)

DN mm	PN* bar			
50	320		Spring shackle	Groove shackle
65	400	With bypass**	Spring shackle	Groove shackle
80	400	With bypass**	Spring shackle	Groove shackle
100	112		Spring shackle	Groove shackle

**optional

Series 72 (screw coupling)

DN mm	PN* bar		Male thread	Bushing with taper and cap nut with round thread
25	320		Rd 46 x 1/6"	Rd 46 x 1/6"
32	500		Rd 75 x 1/6"	Rd 75 x 1/6"
			Rd 80 x 1/6"	Rd 80 x 1/6"
			Rd 90 x 1/6"	Rd 90 x 1/6"
			Rd 90 x 5	Rd 90 x 5
40	320		Rd 80 x 1/6"	Rd 80 x 1/6"
50	400		Rd 85 x 5	Rd 85 x 5
			Rd 90 x 1/6"	Rd 90 x 1/6"
			Rd 95 x 5	Rd 95 x 5
			Rd 120 x 5	Rd 120 x 5
65	400	With bypass**	Rd 120 x 1/4"	Rd 120 x 1/4"
		With bypass**	Rd 120 x 5	Rd 120 x 5
		With bypass**	Rd 130 x 1/4"	Rd 130 x 1/4"
80	400	With bypass**	Rd 132 x 5	Rd 132 x 5
		With bypass**	Rd 140 x 5	Rd 140 x 5

*Exemplary pressure ratings can vary according to type of connection
**optional

Preloaded non-return valve VRSV-C, VRSV-D, steel

With Steck-O

DN 10 - 51 (50) PN to 500
Opening pressure: about 1 bar

Also available with Super-Steck-O connectors.
Also available in stainless steel.

Temperature range
Standard: -10°C to +90°C
On request: -50°C to +230°C

Range of use
Liquids: Liquids group 2 according to PED 2014/68/EU Article 13
As a matter of principle, the resistance to the flow medium must be ensured.

Technical specification
VRSV-C and VRSV-D preloaded non-return valves consist of a steel body with fittings screwed in on both sides. The valve stem of brass is sealed by a stainless steel spring on a POM gasket. The direction of flow is evident from the direction sign on the outside.

Please ask separately, where requirements exceed the standard conditions of use listed in this data sheet.
As a matter of principle, the operating and maintenance instructions, in particular the safety instructions must be observed!
Operating and maintenance instructions as well as the approval certificates can be downloaded at www.von-scheven.de.

We reserve the right to carry out technical modifications.

5.120 EN 08/17

Technical data VRSV-C, VRSV-D

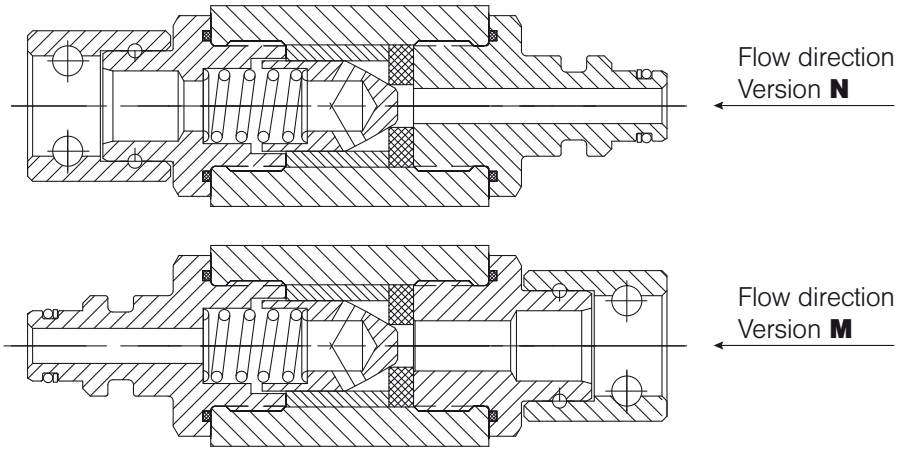

Steck-O DN	PN bar	Input	Output	Face-to-face length mm	Order No.
10	500	Female connector DN 10	Male connector DN 10	127	1015 M
10	500	Male connector DN 10	Female connector DN 10	127	1015 N
10	500	Female connector DN 10	Female connector DN 10	126	1016
12	500	Female connector DN 12	Male connector DN 12	127	1215 M
12	500	Male connector DN 12	Female connector DN 12	127	1215 N
12	500	Female connector DN 12	Female connector DN 12	126	1216
19 (20)	450	Female connector DN 19	Male connector DN 19	153	2015 M
19 (20)	450	Male connector DN 19	Female connector DN 19	153	2015 N
19 (20)	450	Female connector DN 19	Female connector DN 19	155	2016
25	400	Female connector DN 25	Male connector DN 25	196	2515 M
25	400	Male connector DN 25	Female connector DN 25	196	2515 N
25	400	Female connector DN 25	Female connector DN 25	194	2516
31 (32)	300	Female connector DN 31	Male connector DN 31	198	3215 M
31 (32)	300	Male connector DN 31	Female connector DN 31	198	3215 N
31 (32)	300	Female connector DN 31	Female connector DN 31	197	3216
38 (40)	145	Female connector DN 38	Male connector DN 38	226	4015 M
38 (40)	145	Male connector DN 38	Female connector DN 38	226	4015 N
38 (40)	145	Female connector DN 38	Female connector DN 38	226	4016
51 (50)	130	Female connector DN 51	Male connector DN 51	259	5015 M
51 (50)	130	Male connector DN 51	Female connector DN 51	259	5015 N
51 (50)	130	Female connector DN 51	Female connector DN 51	259	5016

Parts list

Pos.	Designation	VRSV-C Material*	VRSV-D Material*
10	Valve housing	Steel	Stainless steel
20	Fitting	Steel	Stainless steel
21	O-ring	NBR	NBR
22	Supporting ring	POM	POM
30	Fitting	Steel	Stainless steel
40	Taper coupling	Brass	Brass
50	Spring	Stainless steel	Stainless steel
60	Seal	POM	POM
80	O-ring	NBR	NBR
90	Spacer sleeve	Brass	Brass

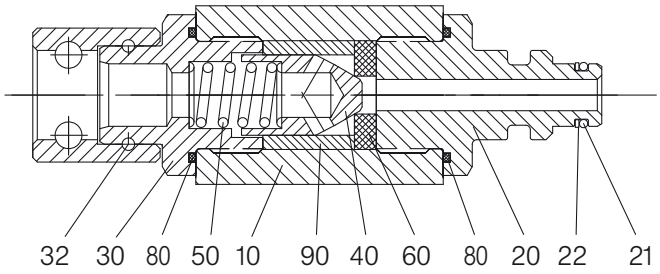

*Standard (can vary according to nominal width), other materials on request.
Up to DN 20, the Steck-O female connectors are swivel design, above they are fixed.
With different connections, the required direction of flow must be stated.
Due to the design, not all items are used for all nominal widths.

Hose breakage safety valve V-SB, steel

DN 25 - 80 PN max. 16

Temperature range Permissible operating temperature: -10°C to +90°C

Technical specification The flow cross-section between the clear valve housing and the valve taper is greater than the flow cross-section of the valve face.
The force of the compression spring is only slightly higher than the pressure difference that is required to overcome the flow resistance of the flowing medium through the free cross-section between the clear valve housing and the valve taper. The valve is thus kept open by this pressure difference. Where a considerable drop in pressure occurs between the valve and the consuming device, due to breakage or rupture of the compressed air pipes, the valve taper is then pressed against the valve seat which interrupts the through flow.
Due to the small bore in the valve taper, a small quantity of compressed air can flow through which on the one hand is no longer able to cause any knocking of the hose, on the other hand, after the hose has been repaired, the space between the valve and the consuming device is refilled until pressure compensation is achieved so that the valve taper is raised by the compression spring from the valve seat, thus releasing the full through flow again.

These valves have been tested for use by the DMT Institute.

Please ask separately, where requirements exceed the standard conditions of use listed in this data sheet.
As a matter of principle, the operating and maintenance instructions, in particular the safety instructions must be observed!
Operating and maintenance instructions as well as the approval certificates can be downloaded at www.von-scheven.de.

We reserve the right to carry out technical modifications.

5.130 EN 08/17

Technical data V-SB

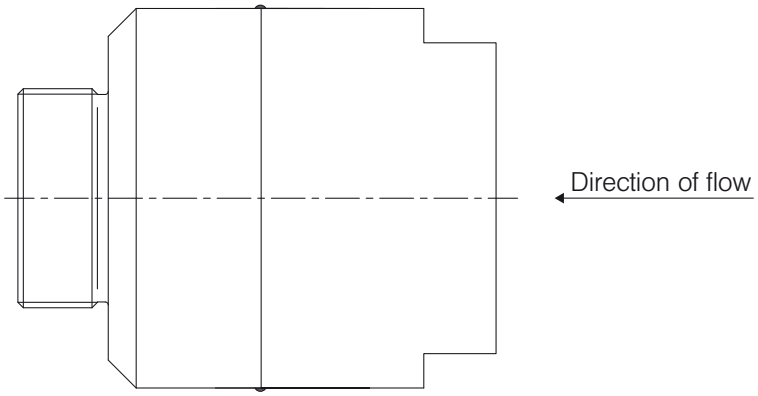

Connection types

Flange

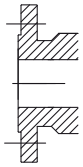

Male thread

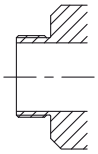

Female thread

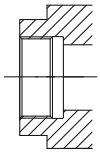

Bushing with taper and cap nut

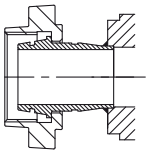

Parts list

Pos.	Designation	Material*
1	Body	Steel
2	Upper part	Steel
3	Valve taper	Brass
4	Spring	Stainless steel
5	Spacer pin	Brass
6	O-ring	NBR

*Standard (can vary according to nominal width), other materials on request.
Due to the design, not all items are used for all nominal widths.

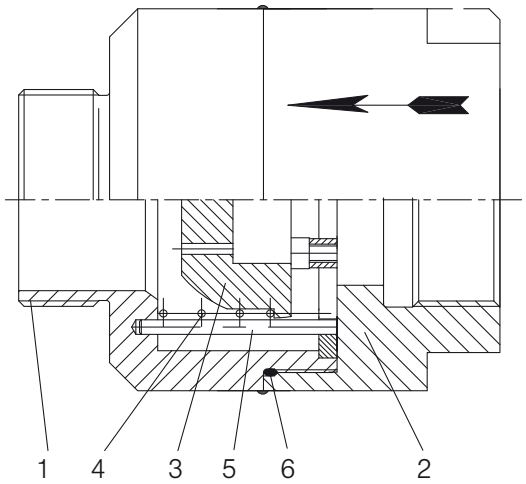

Water spray valve V-KV, brass, stainless steel

With Steck-O

DN 10 PN max. 500

Technical specification

The piston valve V-KV-11-5-3 operates positively, i.e. it is opened by hydraulic pressure and immediately closed by spring load when the hydraulic pressure ceases. The actuating pressure to release the cooling water is preferably taken by the powered cylinder, although it can also be connected to other switch functions, e.g. to the sliding cap. The piston valve V-KV-11-3 operates “bi-stabile”, i.e. through the pulse circuit it automatically stays open and sprays until a closure pulse (HD2) terminates the spraying process.

Please ask separately, where requirements exceed the standard conditions of use listed in this data sheet.
As a matter of principle, the operating and maintenance instructions, in particular the safety instructions must be observed!
Operating and maintenance instructions as well as the approval certificates can be downloaded at www.von-scheven.de.

We reserve the right to carry out technical modifications.

5.140 EN 08/17

V-KV-11-5-3
Positive valve

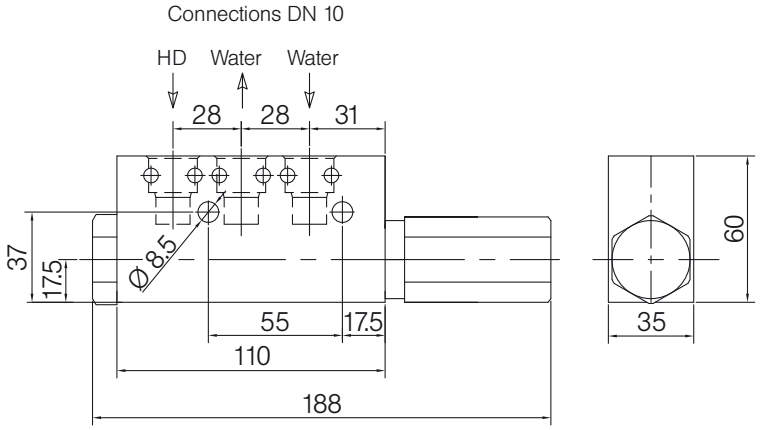

V-KV-11-3
Universal valve
with unlockable
non-return valve

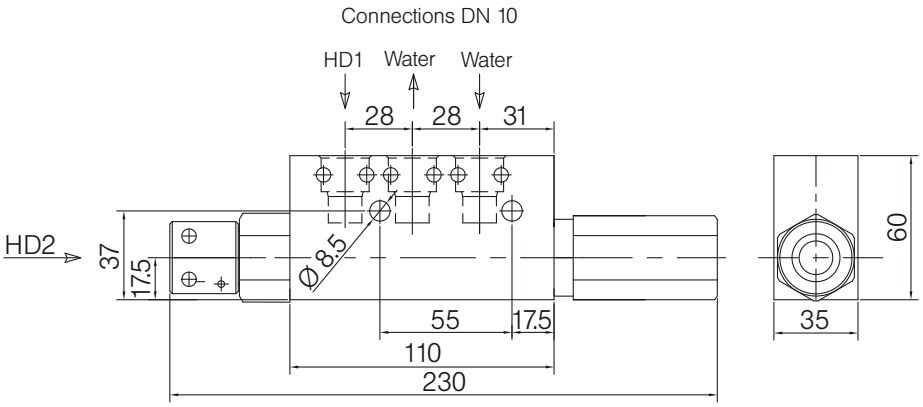

Other dimensions on request.

Compressed air lubricator steel

With female thread

DN 10-50 max. PN 10

Range of use For the fully automated lubrication of the internal components of compressed air actuated machines and devices by means of oil. For horizontal installation.

Please ask separately, where requirements exceed the standard conditions of use listed in this data sheet.
As a matter of principle, the operating and maintenance instructions, in particular the safety instructions must be observed!
Operating and maintenance instructions as well as the approval certificates can be downloaded at www.von-scheven.de.

We reserve the right to carry out technical modifications.

5.150 EN 08/17

Technical data

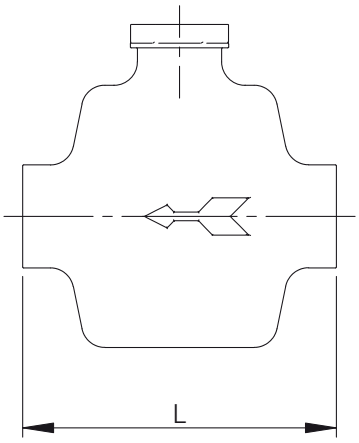

Series 06 (pipe female thread DIN ISO 228-1)

DN mm	Connection	L mm	Content in cm^3
10	G 3/8"	100	210
15	G 1/2"	120	320
20	G 3/4"	120	300
25	G 1"	120	420
32	G 1 1/4"	140	1000
40	G 1 1/2"	140	900
50	G 2"	140	800

For example:

Snow cannons

Artificial snow is an issue for heated debate not only in the Austrian region of Zillertal. With so much at stake, environmental and financial philosophies tend to be diametrically opposed. Reservoirs, pumping stations, pipelines, hydrants, cooling towers, snow cannons and guns – the task of making snow for winter fun and frolic can be quite a challenge. While often covered with excessive amounts of artificial snow in the past, pistes are now transformed into a winter wonderland in a much more targeted manner with the help of GPS and specialist measuring equipment. This translates into cost savings of around 25 %. Additionally, snowmaking devices have been optimised, e.g. for improved water dosage. Our ball valves have been instrumental in this progress – for good reason.

M18

Manual actuations

	Designation	Width across flats	Length
	Hand lever Zinc die-casting	SW 07 SW 10 SW 10 SW 10 SW 10 SW 17	76 mm 112 mm 130 mm 160 mm 180 mm 250 mm
	Hand lever Aluminium	SW 22	370 mm
	Hand lever Steel	SW 07 SW 10 SW 10 SW 17 SW 17 SW 22	95 mm 110 mm 190 mm 300 mm 350 mm 350 mm
	Hand lever Ductile cast iron	SW 22 SW 27	520 mm 700 mm
	Telescopic handle Steel	SW 22	240 to 385 mm
	Twin handle Zinc die-casting	SW 10	110 mm

	Designation	Width across flats	Length
	Safety locking handle with single or double latch Zinc die-casting		110 mm
	Safety locking hanlde with single or double latch Lockable Zinc die-casting		110 mm
	Knob Ductile cast iron	SW 10	Height: 35 mm Diameter: 70 mm
	Toggle Steel		65 mm
	Hand lever with spring return Steel	SW 10	130 mm
	Knob hexagonal Steel	SW 10 SW 17	SW 46 SW 46
	Manual gears		

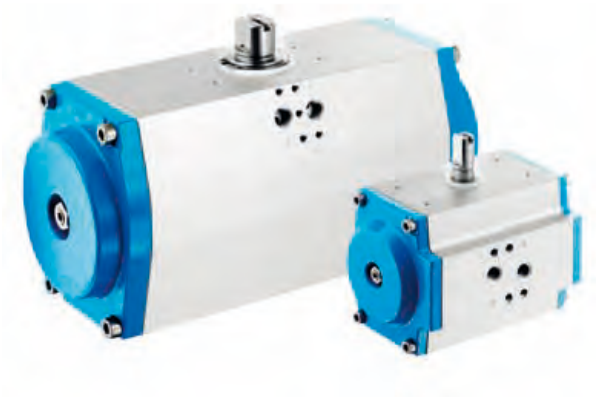

Actuators SP, SPF
Pneumatic

Type SP – double acting
Type SPF – spring resetting

Design Pneumatically actuated double piston swivel actuator in double and single acting (spring resetting) version.
Swivel angle 90°, 120°, 180° and 240°. Additional special swivel angles as well as 3-position drives available.

Torque 5 to 8000 Nm

Actuating pressure 2 to 10 bar

Control medium Filtered air according to PNEUROP/ISO Class 4, additional media on request

Temperature range Standard: from -50°C to +70°C
Auf Anfrage: -50°C to +200°C

Mechanical interfaces ISO 5211, NAMUR VDI/VDE 3845

Mode of operation Double acting function:
The two internal or external drive chambers are supplied with compressed air in line with the rotational direction.

Single acting function:
Only the internal chambers are supplied with compressed air; the return stroke is implemented by the fitment of springs. The number of springs can be matched to the operating conditions.

Technical specification Our ball valves are mostly automated by means of pneumatic actuators. As a manufacturer of ball valves, we can resort to the most diverse third party products in line with customer requirements.
We can also use a partner product that has been proven for decades. These are shown here with their technical data.

6.020 EN 08/17

Technical data SP, SPF

Series SP/SPF 06 to 15

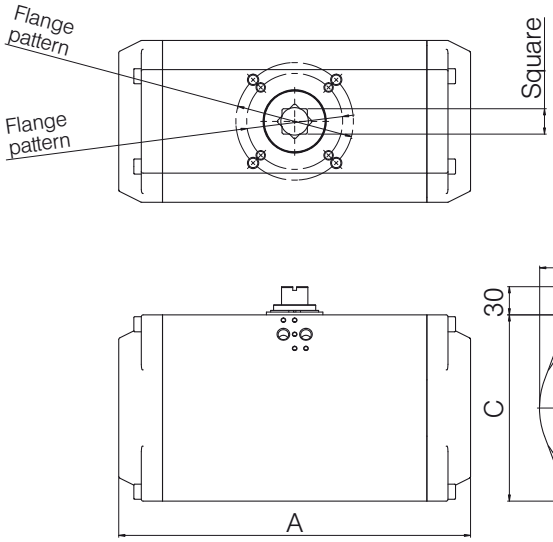

Series SP/SPF 00 to 05

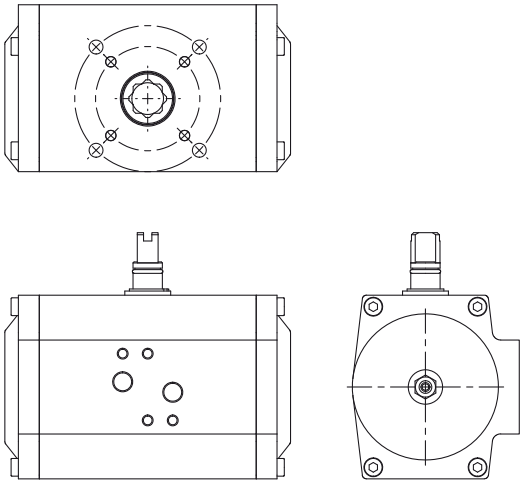

Series SP/SPF	A mm	B mm	C mm	Flange-pattern according to DIN EN ISO 5211	Pinion Square	Weight kg Single stroke	Weight kg Double stroke	Air consumption Litre/ single stroke	Air consumption Litre/ double stroke
00	116	61.5	65	F03/F05	SW 11	0.66	0.60	0.10	0.18
01	133	68.5	74	F03/F05	SW 14	1.00	0.90	0.10	0.25
02	137	80.0	88	F05/F07	SW 14	1.62	1.45	0.13	0.40
03	161	92.5	100	F05/F07	SW 17	2.45	2.10	0.32	0.60
04	180	95.2	100	F05/F07	SW 17	2.95	2.50	0.45	0.88
05	209	110.5	117	F05/F07	SW 17	4.00	3.40	0.62	1.20
06	221	120.0	140	F07/F10	SW 22	6.20	5.20	0.98	1.90
07	291	120.0	140	F07/F10	SW 22	8.35	7.10	1.40	2.70
08	298	137.0	160	F07/F10	SW 22	10.70	9.00	2.00	3.65
09	332	172.0	198	F10/F12	SW 27	15.78	12.42	2.50	4.60
10	374	172.0	198	F10/F12	SW 27	21.10	16.40	3.60	7.00
11	422	224.0	255	F14	SW 36	37.75	27.95	6.50	12.50
12	464	224.0	255	F14	SW 36	39.60	31.80	8.00	15.00
13	603	272.0	302	F16	SW 46	70.60	55.50	14.00	27.00
14	683	272.0	302	F16	SW 46	84.30	69.20	17.00	32.00
15	683	360.0	360	F16	SW 46	107.10	92.00	25.00	46.00

Torque will be specified on request!

Please ask separately, where requirements exceed the standard conditions of use listed in this data sheet.
As a matter of principle, the operating and maintenance instructions, in particular the safety instructions must be observed!
Operating and maintenance instructions as well as the approval certificates can be downloaded at www.von-scheven.de.

We reserve the right to carry out technical modifications.

Actuators

Technical specification The automation of our ball valves is possible with various types of actuators. Apart from the pneumatic actuator (see page 224), electrical, hydraulic or electro-hydraulic actuators from various manufacturers can be attached. Several examples are provided here. Please contact us; we will be pleased to advise you.

Electric actuator

Hydraulic actuator

Electric actuator

Electric actuator

Electric actuator

Electro-hydraulic actuator

Electric actuator

Actuator mounting
With output flange

DN 32 - 250

Technical specification Automating our ball valves is carried out according to the type and nominal width by means of various actuator mountings. These are shown here with their technical data.

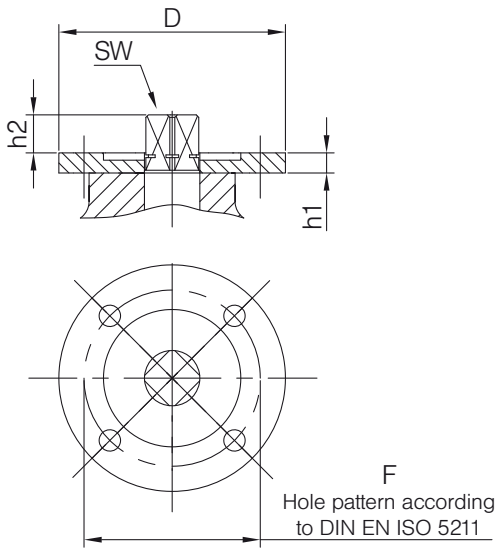

Actuator flange

DN mm	SW mm	F DIN EN ISO 5211	D mm	h1 mm	h2 mm
32	17	F07	90	10	18
40	17	F07	90	10	18
50	17	F07	90	10	18
65	17	F07	90	10	14
80	22	F10	125	10	22
100	22	F10	125	10	22
125	22	F10	125	10	22
150	27	F12	150	14	28
200	27	F12	150	14	28
250	27	F12	150	14	28

6.040 EN 08/17

Actuator mounting
With bridge

DN 32 - 250

Technical specification Automating our ball valves is carried out according to the type and nominal width by means of various actuator mountings. These are shown here with their technical data.

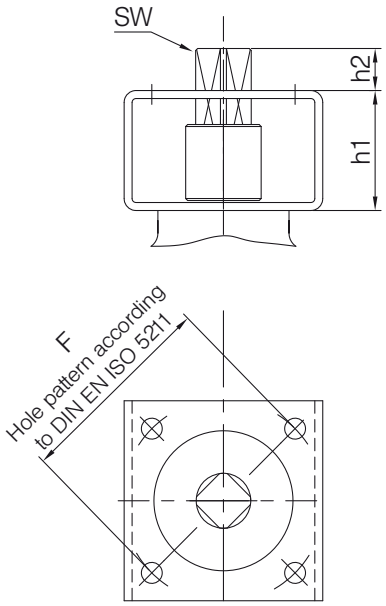

Actuator flange

DN mm	SW mm	F DIN EN ISO 5211	h1 mm	h2 mm
10	14	F05	30	14
12	14	F05	30	14
16	14	F05	30	14
20	14	F05	30	14
25	14	F05	30	14
32	17	F07	60	19
40	17	F07	60	19
50	17	F07	60	19
65	17	F07	60	19
80	22	F10	60	22
100	22	F10	60	22
125	22	F10	60	22
150	27	F12	80	33
200	27	F12	80	33
250	27	F12	80	33

Actuator mounting
Direct

DN 32 - 250

Technical specification Automating our ball valves is carried out according to the type and nominal width by means of various actuator mountings. These are shown here with their technical data.

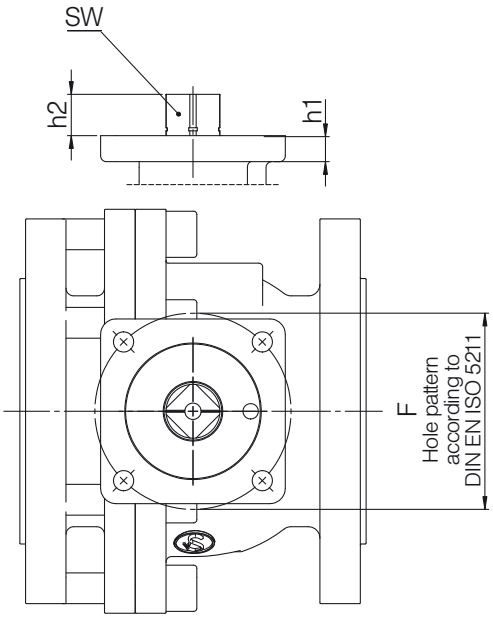

Actuator flange

DN mm	SW mm	F DIN EN ISO 5211	h1 mm	h2 mm
32	17	F 07	10,0	18
40	17	F 07	10,0	18
50	17	F 07	10,0	18
65	17	F 07	10,0	18
80	22	F10	13,5	22
100	22	F10	13,5	22
125	22	F10	13,5	22
150	27	F12	23,5	28
200	27	F12	23,5	28
250	27	F12	23,5	28

Please ask separately, where requirements exceed the standard conditions of use listed in this data sheet.
As a matter of principle, the operating and maintenance instructions, in particular the safety instructions must be observed!
Operating and maintenance instructions as well as the approval certificates can be downloaded at www.von-scheven.de.

We reserve the right to carry out technical modifications.

Accessories

For the automation, respectively end position feedback of our ball valves we offer extensive accessories from proven manufacturers. Several examples are provided here.

Directional control valve

Limit switch box

Limit switch box

Limit switch box

Inductive limit switch

Mechanical limit switches

Special programme

Designation		Designation	
	Ball valve lockable		Y-double ball valve with automatic pressure relief
	Ball valve with lock-in-positions		3-way changeover ball valve with special connections
	Ball valve with small flanges according to DIN 28403		Ball valve for hydrants
	Customer specific ball valve combination		Ball valve combination for snow canons
	T-ball valve		Ball valves DN 300 mm PN 64 bar

	Designation		Designation
	Ball valve with flange and male thread connection		Double ball valve with safety interlock
	Ball valve with stem extension		Ball valve with limit switch
	Ball valve with pressure relief		Pig ball valve
	Angle ball valve		Floor drain valve
	Ball valve combination with one hand lever		Ball valve combination with actuator

Designation		Designation	
	Spray lance		SAE flange ball valve special design
	Water supply point for skin and eye cleaning		Safety travelling valve
	Ball valve fitted on a frame	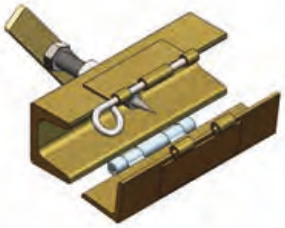	Hose cracker
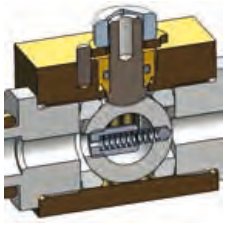	Ball valve with integrated non-return valve		Ball valve with electro-hydraulic drive
	Distributor		5/3-way ball valve

	Designation		Designation
	Multiway ball valve combination		Non-return valve firefighting industry VdS approval
	Distributor combination for accelerating admixtures		Section valve for firefighting systems VdS approval
	Hose connector		Ball valve combination
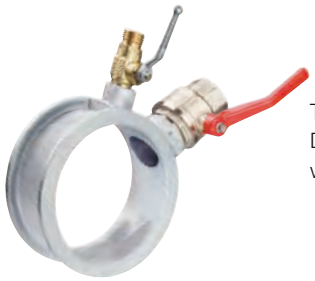	Tapping ring DN 100 -250 mm with ball valves		Ball valve for manifold installation with banjo bolt
	Floor drain valve		Twofold ball valve

Certificates

TÜV Certificate DIN EN ISO 9001:2008
TÜV Certificate AD-2000 HP 0
TÜV Certificate DGRL 2014/68/EU
TÜV Certificate TA Luft
TÜV Certificate in-house inspection service TPED

TÜV Certificate component test

GWI-HTB inspection

VdS Certificate
Production facility VdS approved production

Apragaz Type Approval TPED
BAM Test report according to DIN EN ISO 15615:2002

DVGW Gas certificate

SVGW Gas certificate

TR customs union certification of the EAC (CUC)

The latest certificates can be obtained by download from www.von-scheven.de.
In addition, individual approvals are possible from all current inspecting authorities.

phone +49(0)2324-9742-0 www.von-scheven.de eMail: info@von-scheven.de

Pressure-temperature Chart

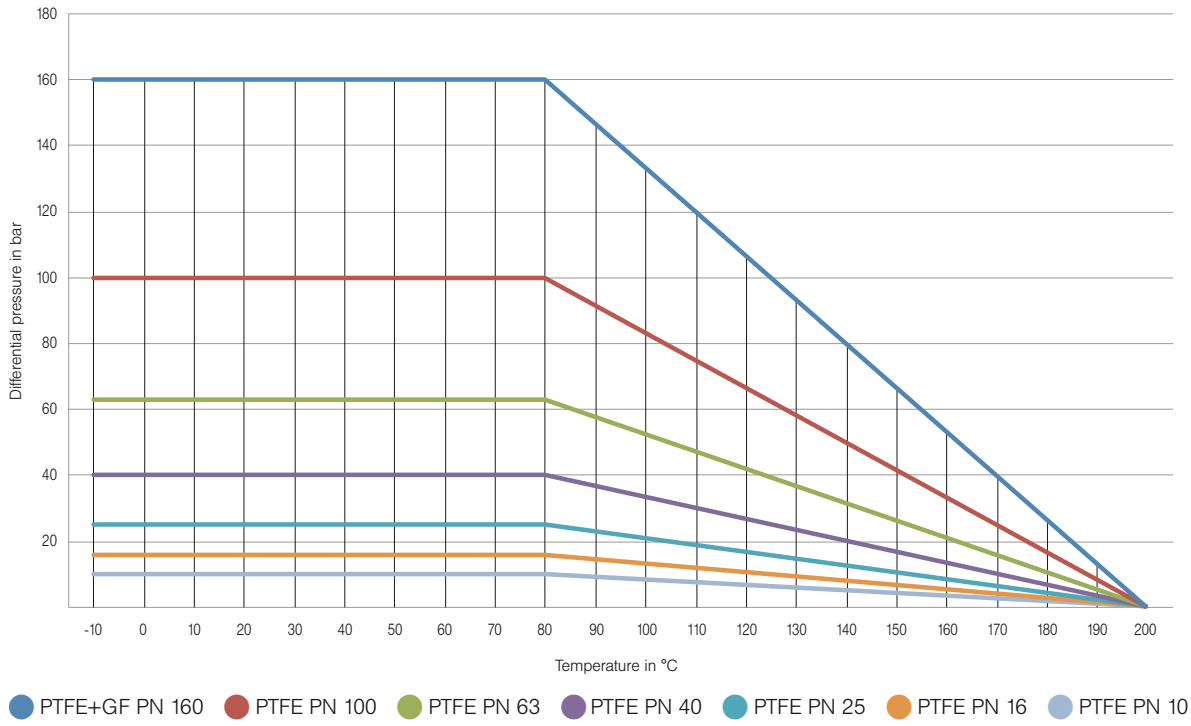

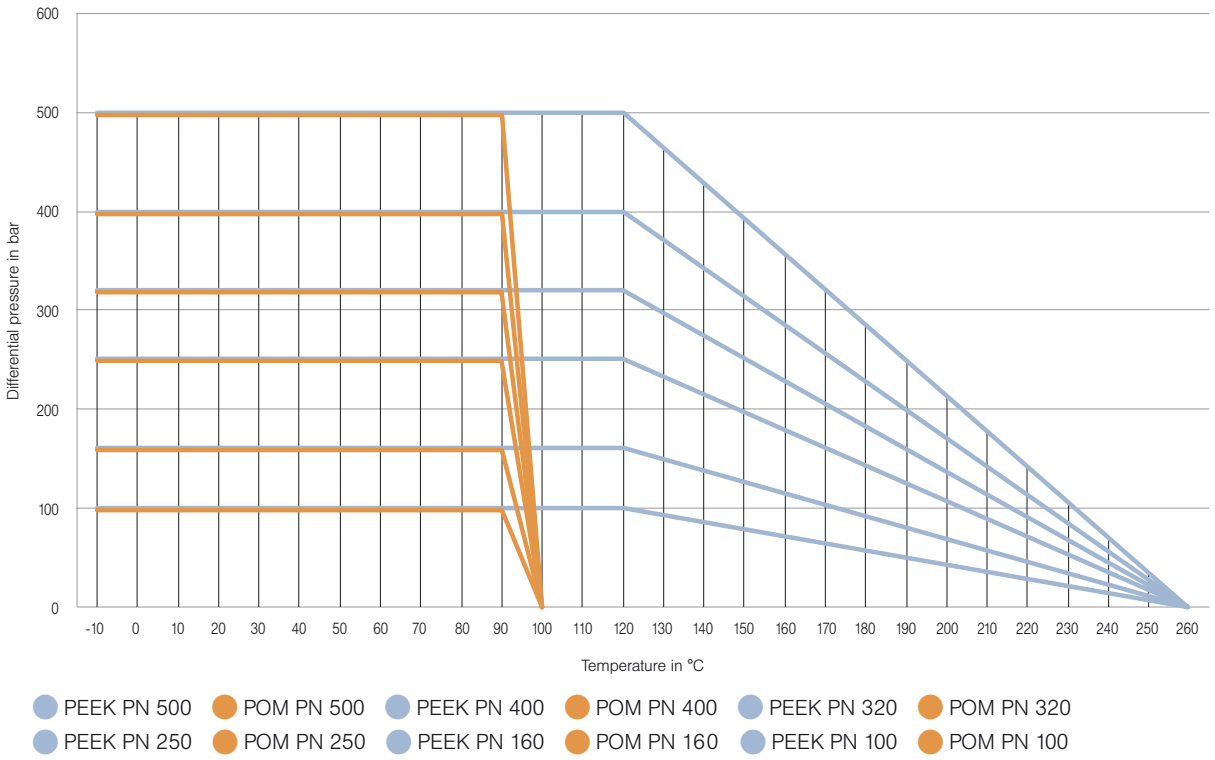

Please note that these PT charts are intended for layout assistance, and cannot take into account all relevant practical parameters.
Please contact us if you should require any further advice.

0.020 EN 05/15

80 Years
1937-2017

vonScheven

Rudolf von Scheven GmbH
Wuppertaler Strasse 10-12, D-45549 Sprockhövel
Phone +49 (0)23 24/97 42-0
www.von-scheven.de

EN/AUG 2017/XXX/OY/LW