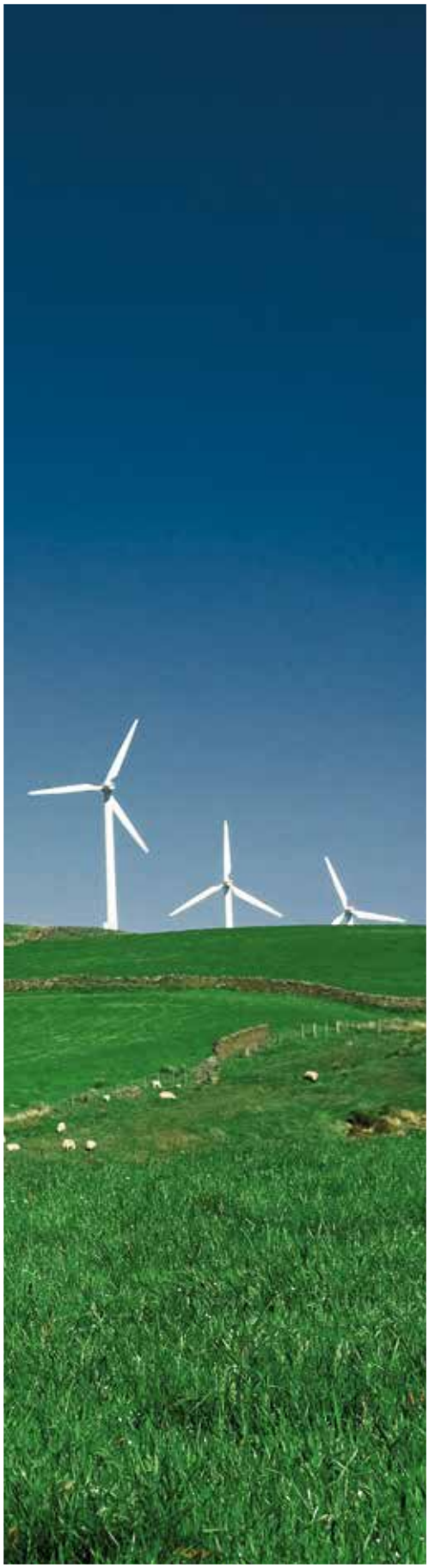

INDUSTRY SOLUTIONS

MHA ZENTGRAF
FlowControl Technology

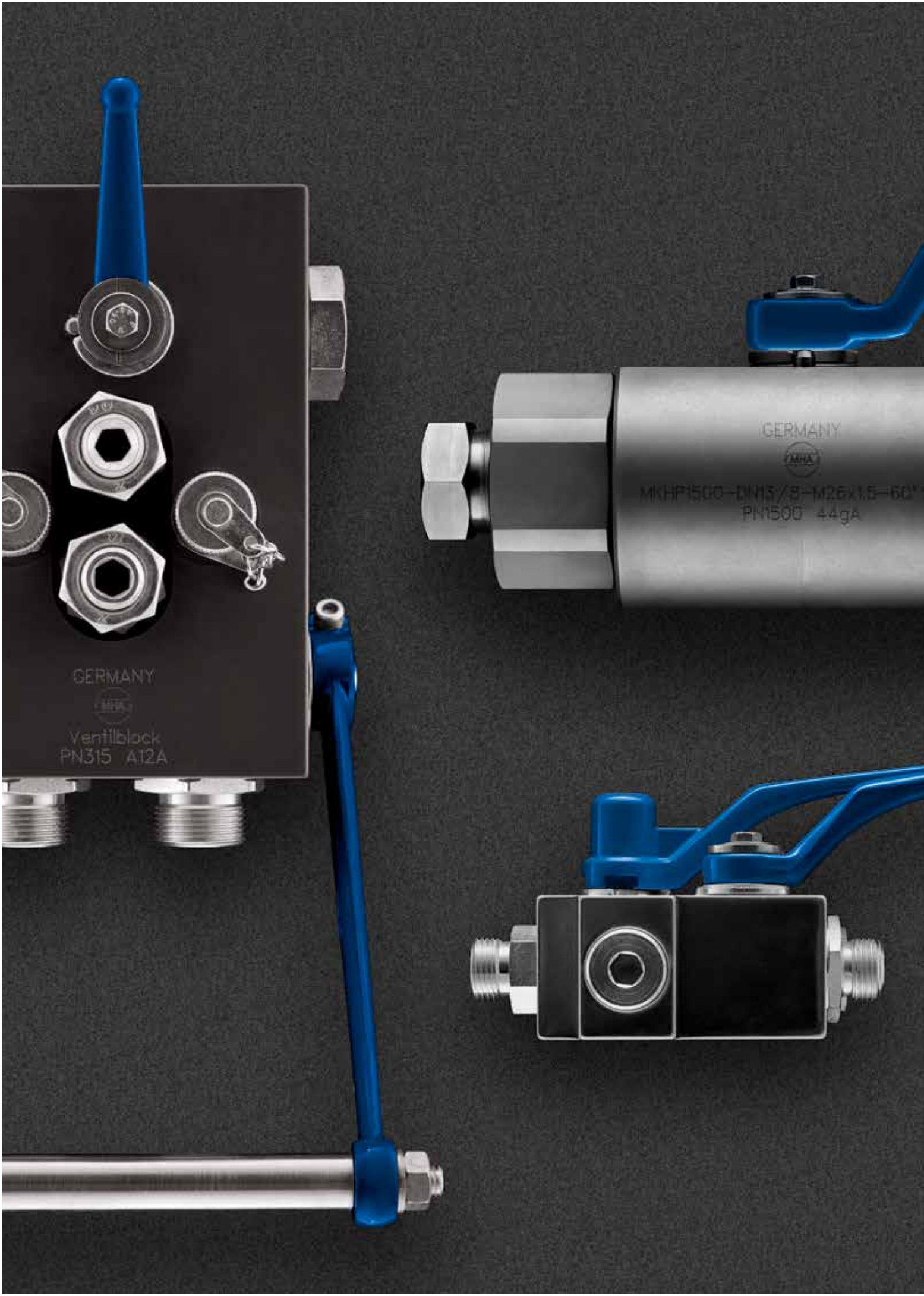
GERMANY
Ventilblock
PN315 A12A
GERMANY
MKHP1500-DN13/8-M26x1.5-60°
PN1500 44gA

Application-specific ball valves

Our industry solutions

Why do we have just the right product for you? Because we can offer a very large number of standardised solutions and an unlimited number of individual solutions.

We supply high-quality ball valves at reasonable prices – including branch competence in the automotive industry, construction and agricultural machinery, fire protection, renewable energy, ship building & offshore applications, mining and tunnel drilling, oil & gas as well as the steel & chemical industry.

For all of these branches of industries, we give you the good feeling that you have acquired a safe, first class product.

Ball valves with firesafe approval

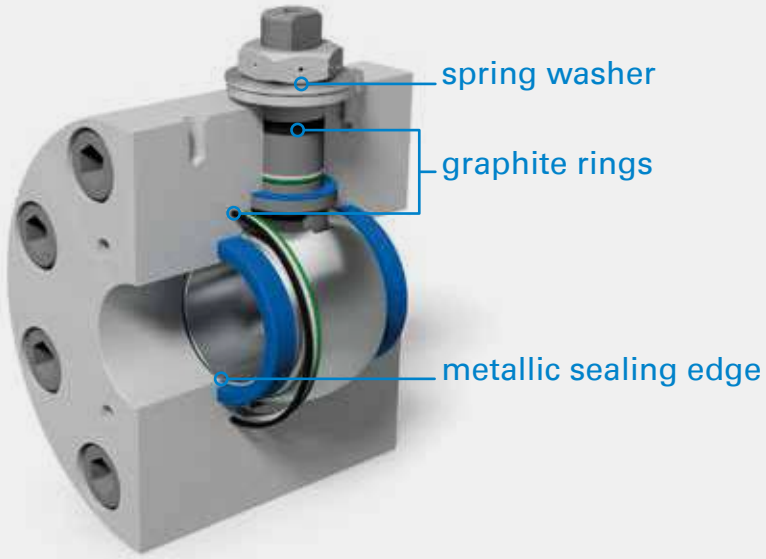

When handling flammable liquids, safety must be a prime concern. Great importance is therefore attributed to the design of "firesafe" shut-off valves utilized in many industrial environments including:

- Chemical and petrochemical plants
- Oil drilling and refineries
- On- /offshore installations

When fire does break out, it is important that it does not spread through failures in pipe-work systems. Even under the most extreme conditions shut-off valves must provide:

- Secure operation
- Reliable sealing in shut-off position
- Reliable sealing from ambient atmosphere

Sizes from ½" to 3"

420 bar (6.000 psi)

Bi-directional usage

Certified acc. ISO 10497, API 607

Additional tests and documentation on request (e.g. PMI, penetrant testing, gas test, ...)

- 1.4571 (AISI316Ti) body and connector material
- PEEK ball seats
- FPM o-rings (or others on request)
- Graphite secondary seats

- Threaded connections:
  ISO 228, NPT female, UN female, DIN 2353 cutting ring, ...
- Flange connections:
  ISO 6162-1/2, ISO 6164, ANSI RF, ...

Flangeable cylinder valves for e.g. riser tensioner system

- Sizes from 5/8“ to 8“ (DN15 to 200)
- Pressure up to 10.000 psi (690 bar)
- Steel, stainless steel or duplex
- Bypass option

Highly corrosion-resistant bronze marine valve

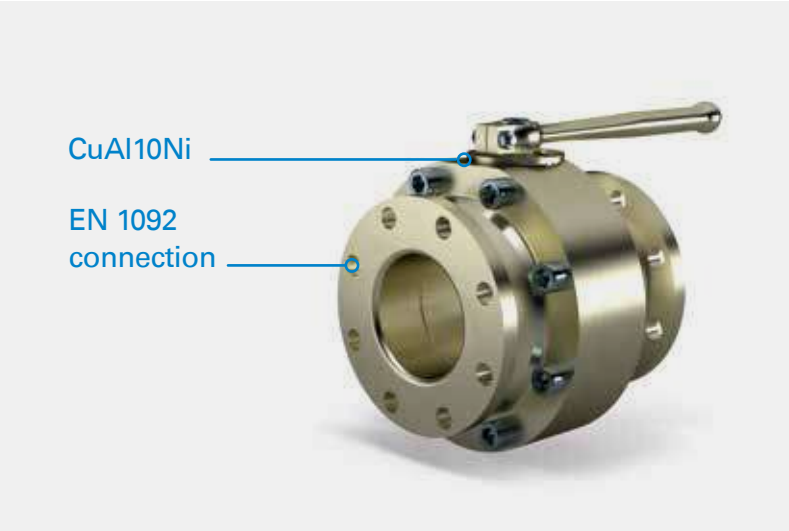

- All metal parts made of nickel-aluminum-bronze
- ½“ (DN13) to 8“ (DN200)
- up to 420 bar (6000 psi)
- Flange or piping connection

Double safety & bleed (DSB) valve

MHA Double Safety and Bleed valves combine various valve functions in one block. This solution is more space saving and contains much fewer potential leakage points compared to a muliple piped valve solution.

Possible options for MHA DSB valves are

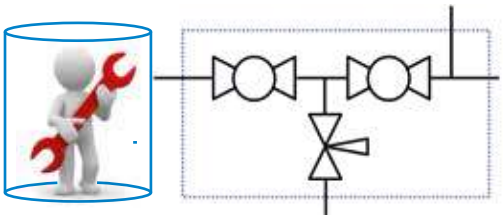

Fig. 1: Double safety & bleed option

Fig. 1: **MHA** Double Safety and Bleed valves ensures a two stage isolation with an integrated bleed valve at high security work areas. When maintenance service is conducted both valves are closed. Through the bleed valve the isolation of the valve can be proven. Through integrated test points the fluid conditions can constantly been monitored.

Fig. 2: **MHA** DSB valves allow to carry out maintenance service at components without shutting the HPU down:
Main valve A is closed. Through opening valve C fluid from maintenance component is bleeded. After closing valve B maintenance can be conducted with double isolation safety level.

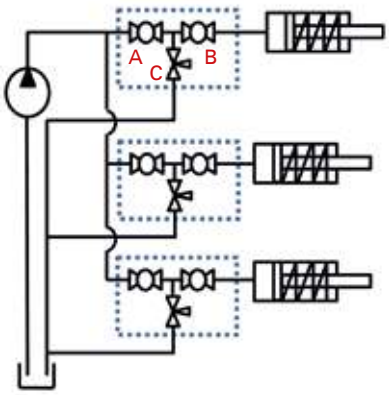

Fig. 2: System maintenance optimisation

Available options

Double Safety & Bleed
Double Safety & Bleed + Bypass
Double Safety & Bypass

Available connections

ISO 6162-1/2
ISO 6164
ANSI RF

Full trunnion gas valve

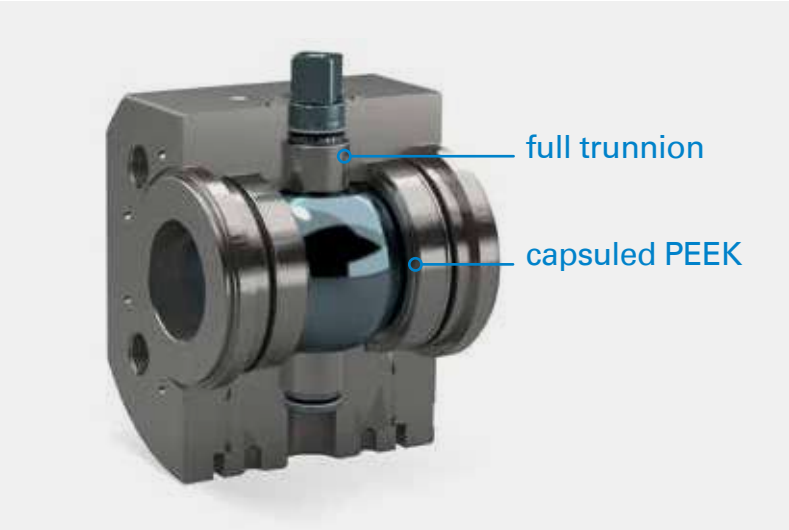

- 5.000 psi (350 bar) full ΔP
- Carbon or stainless steel up to 8″ (DN200)
- Full trunnion design with capsuled PEEK seats
- VDS tested
- LRS or other classification society approvals
- Manual actuation or automated solutions

Valve assemblies

Do you need a complete valve assembly?

MHA can supply not only single valves but also complete valve assemblies that reduce the assembly time and effort for a customer's shopfloor personnel.

Upon request the assembly comes fully pressure tested or with aces-sories like actuators or limit switches.

Subsea ball valves

In subsea applications customers need to completely rely on the equipment they use. With an exceptional quality level as well as a proven functionality, you can be guaranteed by **MHA** subsea valves and equipment.

Subsea hot stabs

- Single, dual and multiple port versions
- Pressure ratings up to 1.000 bar (14,500 psi)
- Various handle configurations
  - T-handle
  - Fish handle
  - Offset

Other subsea equipment

- Subsea and marine grade cylinders
  - Marine platform lift and level
  - Subsea “timing” cylidner
- Complete ball valve and hot stab with receptacle assemblies
- “Seal sub” BOP fittings
- Subsea manifolds

Safety bleed valve

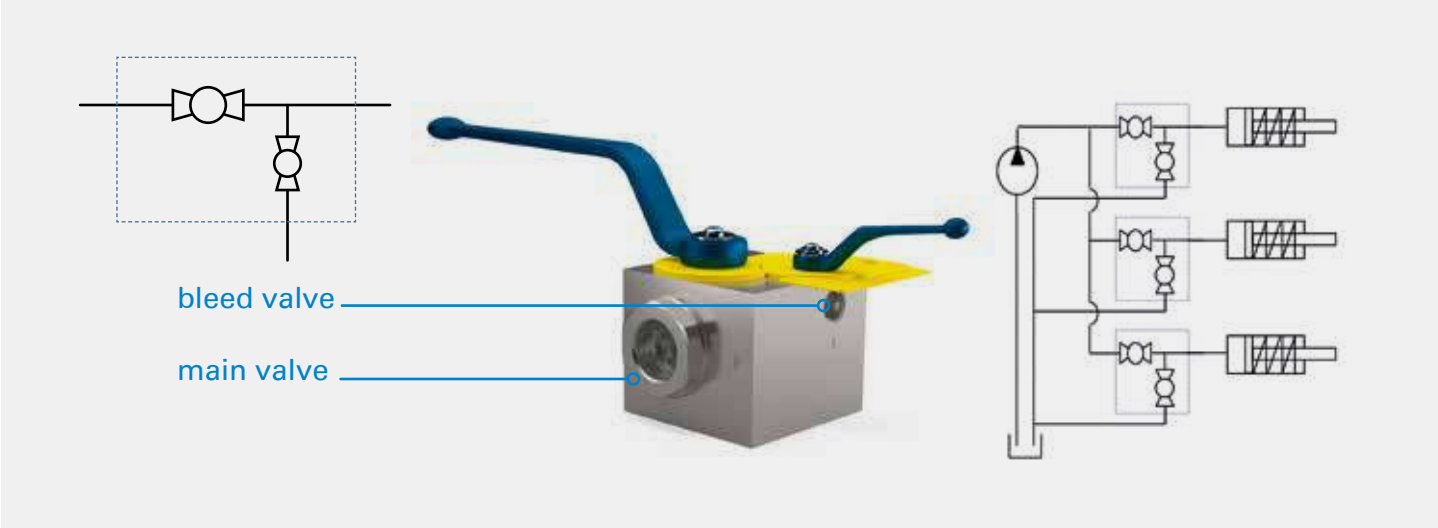

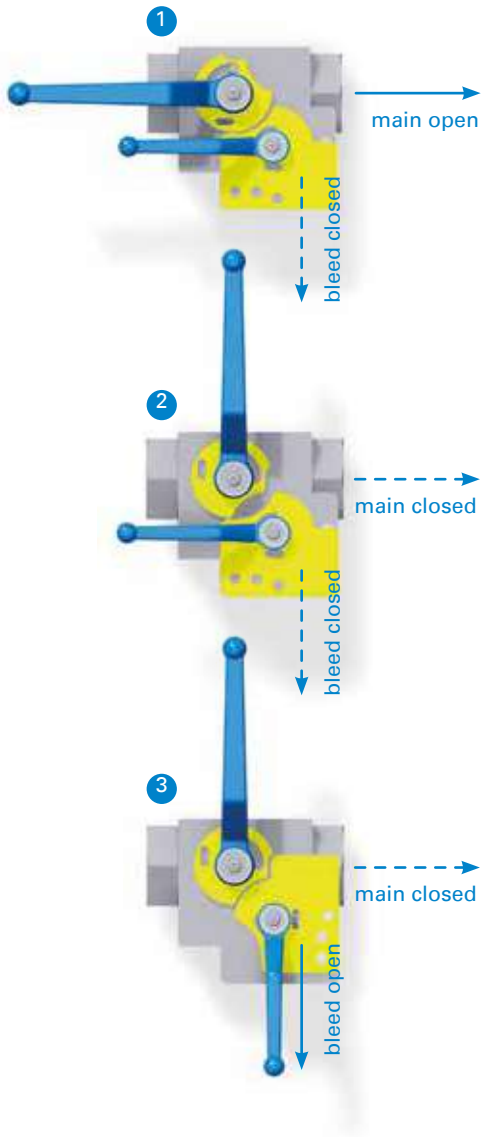

Maintenance valve used for example in tunnel boring machines, allowing for service of cylinders without shutting down the hydraulic system. Separated shut off and bleed valve guarantees safe isolation of media in accordance with DIN EN 982 with locking device for up to 3 padlocks and integrated on/off label.

1 Normal operating position

In this position the main valve is open and the bleed valve is closed.

2 Main close position

First step in locking out the hydraulic supply to the machine is to close the main valve.

3 Bleed position

Second step is to bleed the hydraulic consumer through the bleed valve. Through the cam plate design the bleed valve can only be operated if the main valve is closed. The possibility to lock the valve position with up to three padlocks ensures a safe maintenance service for the workers.

Valve configuration also available as manifold mounting version

Renewable Energy

Renewable energies play an important and growing role in the energy supply for many countries. The share of energy from renewable sources in Europe was 19,7% in 2021. A significant and growing part of that energy is generated by wind turbines. Ball valves are used in various sub systems of wind turbines.

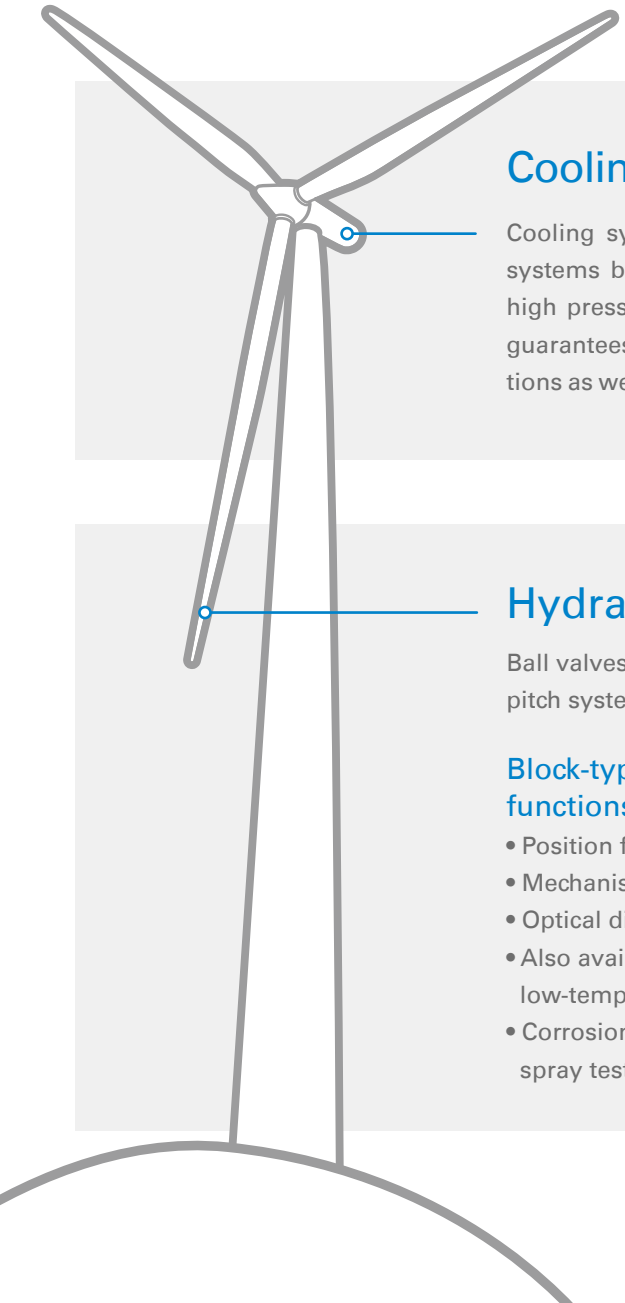

Cooling Systems

Cooling systems are usually low pressure systems but due to vibration the usage of high pressure ball valves in those systems guarantees high robustness against vibrations as well as a high level of leak tightness.

Hydraulic Pitch system

Ball valves are used in HPU's of hydraulic pitch systems.

Block-type ball valve with integrated functions

- Position feedback with sensor
- Mechanism against unintentional actuation
- Optical display of position
- Also available for offshore or low-temperature applications
- Corrosion resistance over 700 h in salt spray test possible

Excavator grab tooling valve

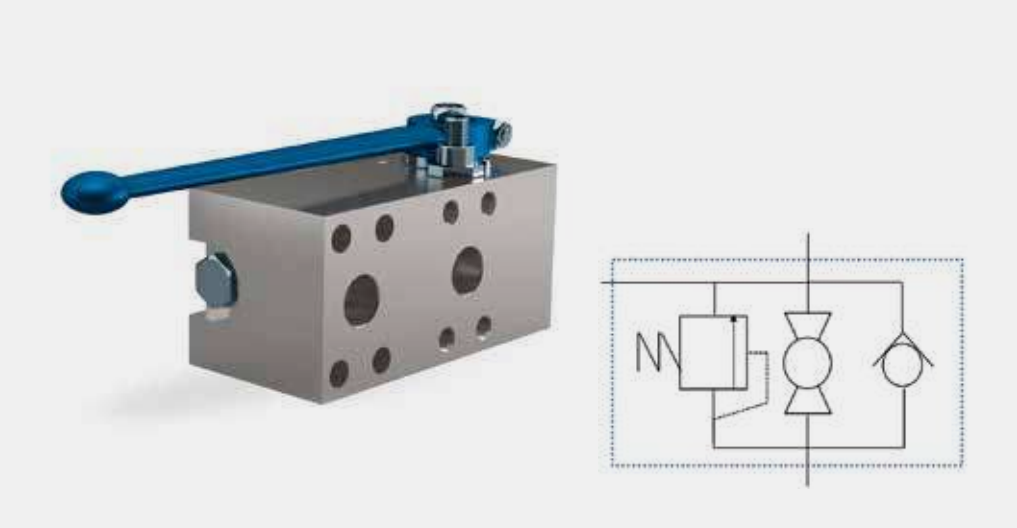

This valve combination is used in excavators for special tooling. Integrated safety function against overload pressure, combining ball valve, check valve and pressure relief valve in one valve block. Robust and space optimized design with fewer potential leakage points than piped solution.

Examples of multi-functional valve modules

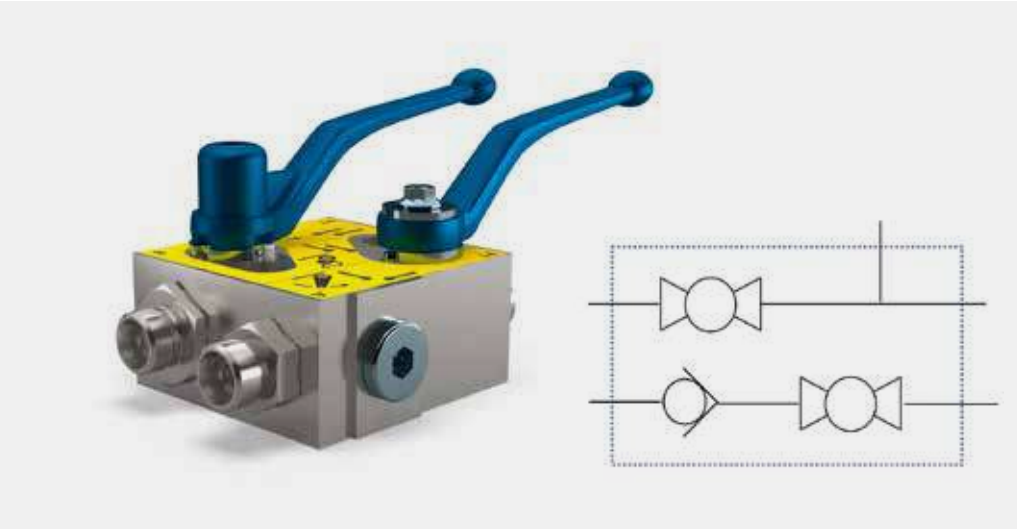

Changeover block for front linkage

This changeover block is mainly used in agricultural equipment. Allows for manual override of equipment movement functions. Space-saving valve block design, combining two ball valves and one check valve. The valve can be directly panel-mounted and is protected against unintentional operation.

Ball seat design for gas applications

When the ball valve starts opening gas can cause significant damage to standard ball seats through increased flow rates.
The **MHA** ZENTGRAF seat design with an inner metal ring protects the ball seat from erosion and increases the lifetime of the ball valve significantly.

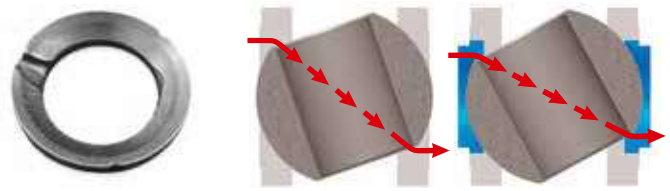

eroded ball seat | standard seat design | **MHA** ZENTGRAF gas seat design

ATEX ball valves

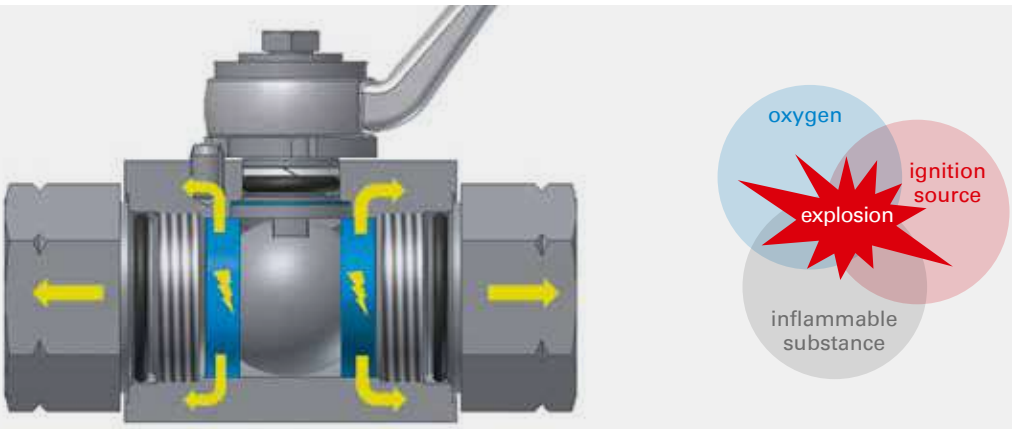

Explosions can cause loss of life and serious injuries as well as significant damage. The aim of the ATEX directive is both to apply a single level for health and safety requirements and to overcome trade barriers. The main purpose of the ATEX directive is to minimize or completely eliminate the risk of ignition in explosive areas and to limit the harmful effects in case of an explosion. Explosive atmospheres (Ex areas) can be found where a mixture of air, flammable gases, vapors, mists or dusts are being produced, transformed or stored in the presence of oxygen. This may, for example, be the case in power plants, refineries, chemical facilities, paint facilities, air- and seaport storage tanks.

The new ATEX directive 2014/34/EU specifies some changes regarding ball valves classification.
According to that regulation ball valves are not classified to be marked with the Ex-symbol as they are not classified as "fast acting/shifting valves". Therefore they are said not to be affected by the ATEX directive.

Nevertheless **MHA** ZENTGRAF did a risk analysis in the past and found out that there is a risk of electrical current emerging inside the valve. Therefore **MHA** ZENTGRAF highly recommends special electrically discharging ball seats to be used for potentially explosive areas.

Distributor block for gas filtration stations

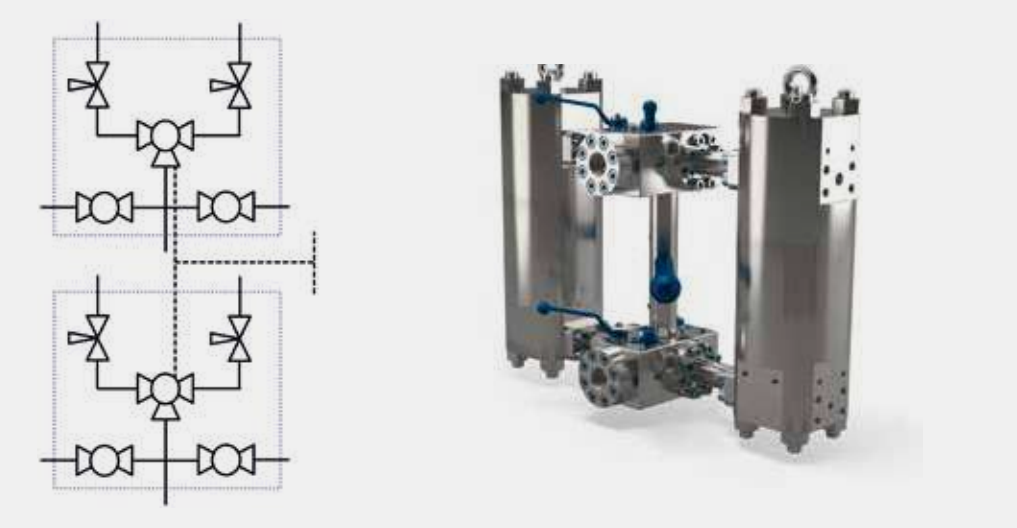

- Several integrated functions and ball valves in one block
- Mutual activation of two blocks
- Material suitability in accordance with NACE MR0175
- O-rings against explosive decompression and suitable for temperatures down to -46°C

Components for all CNG processing steps

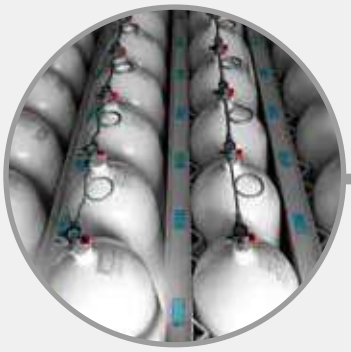

Storage / compression

Transportation

Gas station

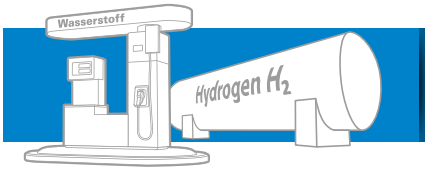

Hydrogen

H_2 Ready

The right product for your hydrogen application

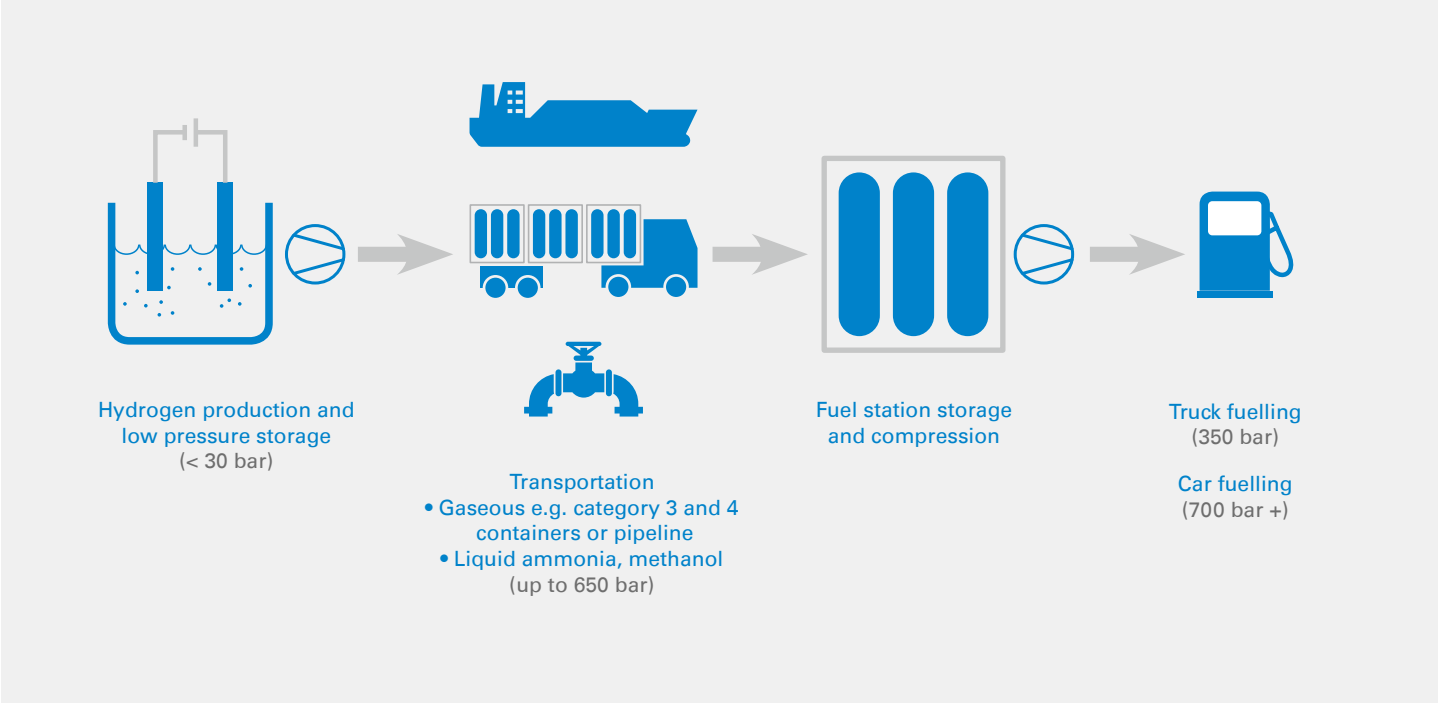

Our products can be used in the complete hydrogen process chain - hydrogen generation, transport and mobile pipelines as well as compression and fuelling stations. We also pay attention to your specific application conditions to offer you the technically and economically best solution.

The new HFKH product family

With the new HFKH family MHA offers a product range especially designed for the needs of hydrogen applications.
By using hydrogen compatible materials the HFKH500, HFKH650 and HFKH1000 can be used in applications for hydrogen storage, transportation and fueling up to 1.000 bar

Automation on request

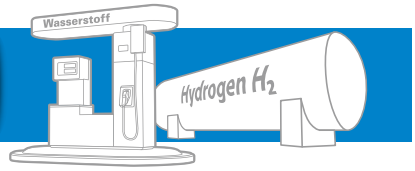

Key features of MHA ball valves in hydrogen applications

Size reduction

Ball valves have a significant advantage compared to other types of valves:
Full flow cross section in open position! A DN13 ½“ ball valve has a Cv value of 22 gal / min. This Cv value can only be reached with sizes of approx. DN32 (1 ¼“) at other valve types, e.g. globe or needle valves. In addition, ball valves can be used to achieve a high degree of leakage free closure.

Temperature range

- Materials suitable for temperatures from -40 °C up to +150 °C
- Temperature range acc. ISO 19880-3 is specified as -40 °C / +85 °C

Leakage

Internal and external leakage acc. DIN EN 12266 leakage rate A and the upcoming TPED standard for ball valves, ISO 23826

Lubricants and cleaning

- Oil and grease free products through ultrasonic cleaning
- Assembly of valves without additional lubrication at all wetted surfaces

Metallic materials

- Due to its high resistance against hydrogen embrittlement, 316-Series stainless steels (1.4404, 1.4571) are used whenever possible.
- If higher material strength is required, e.g. for stems, balls or trunnions, high strength austenitic stainless steels with particular resistance to strain-induced phase transformations, such as A286 (1.4980) and Nitronic-50®, are used. Duplex or Martensitic grades are avoided.

Pressure testing

- Pressure testing acc. DIN EN 12266-1
- Static and Cyclic high pressure gas testing with air (≤ 550 bar) or nitrogen (up to 1000 bar) in the temperature range from -40 °C to + 85 °C
- Valve endurance tests acc. to ISO 19880-3 and ISO 23826 (actuation at full ΔP, -40 °C ≤T ≤ +85 °C) carried out inhouse during development and on customer request

Sealing materials

- All sealing materials chosen to prevent damages through explosive decompression (e.g. NORSOK M-710)
- Sealing materials acc. DIN EN ISO 11114-2 for hydrogen usage
- Special attention is paid to low temperature seal performance

Ball valves for CO_2 processes

Of course, it is correct that the global CO_2 footprint needs to be reduced significantly to reduce global warming. But, it is often forgotten that CO_2 is also an important part of industry and chemical processes that help to reduce consumption of precious resources like water and chemical solvents.

Cooling

More and more modern cooling systems avoiding the usage of fluorinated gases that are quite harmful to the environment. Instead they are using the cooling abilities of CO_2.

Extraction

CO_2 can be used to extract flavours from natural products like spices, fruits, grain and many more. By using CO_2 the extracted product achieves a high purity level and no solvents or water are waisted.

Dyeing

To dye fabrics a massive amount of water is wasted every year. Furthermore the sewage from those dyeing processes contaminates rivers and lakes in many countries. New technologies are using CO_2 to dye fabrics without using a single drop of water.

MHA valves are used among the whole CO_2 process chain for liquid, gaseous as well as supercritical CO_2.

- Special designs up to 1.000 bar (14,500 psi)
- FDA compliant materials upon request
- Manual or automated valve solutions
- Pipe fitting connection as well as flange connection possible

Bypass ball valve with flange connection

When large diameter ball valves have to be activated at full differential pressure, a smaller bypass ball valve is used before activation in order to equalize the pressure. We combine the bypass and main activation in one block in order to prevent leakage points compared to a piped solution.

Benefits

- Designed for use in harsh conditions
- Locking device to prevent unintentional activation

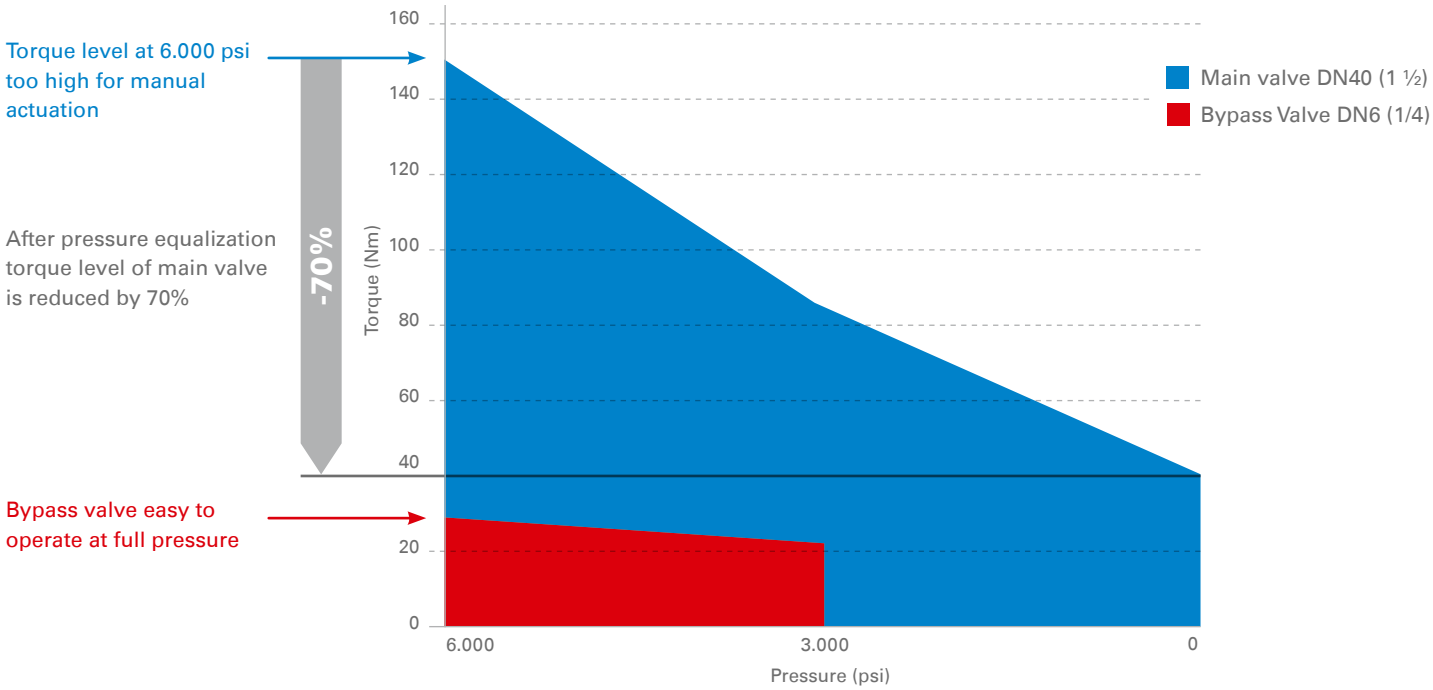

Chemical industry ball valves

Extreme conditions such as hot sulfuric acid service require special coatings and superior corrosion resistance of all components used within the system.
MHA ZENTGRAF can supply a large variety of valve body materials (e.g. Inconel, Hastelloy, Superduplex) as well as special coatings such as tantalum coating. Such coatings provide extreme corrosion resistance on a economic price level compared to valves made of complete bar stocks.
Furthermore special services such as valve cleanliness certificates or helium leakage rate test protocols can be provided.

Aggressive fluids and gases request a high quality level for ball valves.
To meet these requirements, **MHA** can supply tailor made solutions.

- Low emission seat systems
- Low dead space
- Vacuum connection
- Seat materials suitable for aggressive fluids and gases

Filtration applications

- Core design of most filtration applications is a combination of two 3/2-way ball valves actuated with one handle
- Sizes from ¼″ to 3″
- Threaded or flanged connection
- Pressure rating up to 420 bar (6.000 psi)

Electrically-operated ball valves for power plant hydraulics

- Electrical actuator in accordance with customer specifications
- ATEX certified
- Emergency manual override

Fire protection application examples for railway, tunnel, buildings and marine

Product range for fire extinguishing systems

- Nominal diameter: 4 - 200 mm
- 15.000 section valves per year
- Steel, stainless steel
- Manually operated or actuated (pneumatic, electric, hydraulic)

Valves can be used with typical fire extinguishing media like water mist, argonite, nitrogen, CO2 and others.

Automotive & Chemical (paints, lacquers, isocyanate ...)

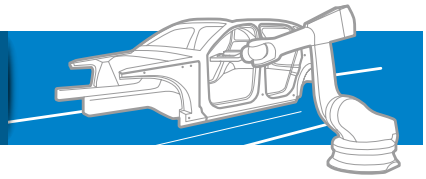

Sealing, gluing

e.g. sheet metal overlapping for corrosion protection, windscreen, ceiling

Typical media:
- Polyurethane
- Thermoplastics (PVC, PA, PET)
- PVC, rubber

Painting

Typical requirement:
LABS-free (the valves can be specially cleaned to remove paint wetting disruptive substances)

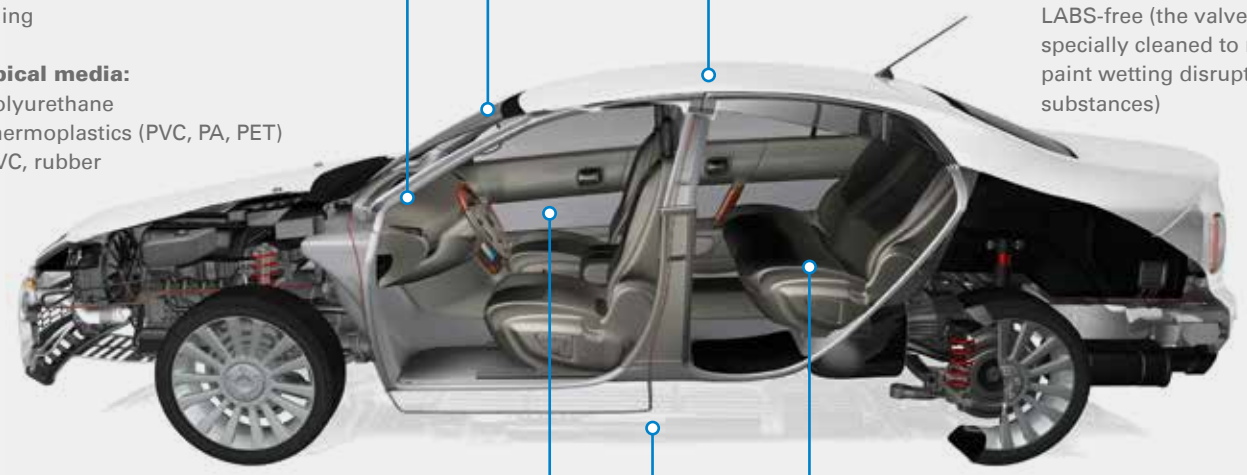

Protection / damping

e.g. noise protection, protective undercoating

Typical media:
- Polyurethane
- Plastisol
- Mastic (protective undercoating)

Polyurethane (PUR)

e.g. seat padding

Typical media:
- Isocyanate (MDI, TDI)

MHA ZENTGRAF offers a wide range of suitable valve setups for different automotive industry processes. In many cases highly viscous or abrasive fluids are used which provide major challenges for valve seat materials. For those media **MHA** ZENTGRAF uses metallic ball seats with a specially hardened ball to ensure a long lifetime in the process. **MHA** ZENTGRAF ball valves are also available with heating devices and temperature sensors in order to keep the temperature regulated during the manufacturing process. On request the valves can be specially cleaned to remove paint wetting disruptive substances (LABS-free). Equipped with actuators and limit switches our ball valves can be integrated into any automization concept.

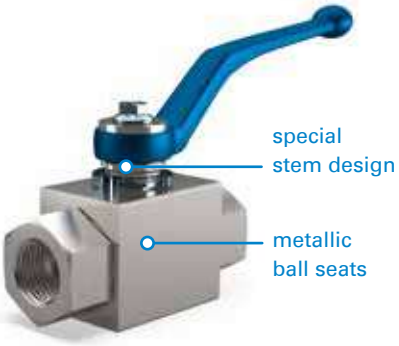

Ball valves for isocyanates and abrasive media

Isocyanates require a special seat setup as they react with humidity and develop crystalline particles. To prevent the fluid from coming into contact with environmental humidity, the ball valves have to be leakproof. This is ensured through a special stem setup.

Furthermore, some isocyanate types would damage standard plastic ball seats. That's why metallic ball seats are used for this application to increase the lifetime of the ball valves.

Your manifold - Our solution

MHA ZENTGRAF offers a variety of product solutions for your manifold project. A variety of block mounting ball valves as well as flow control valves are available.

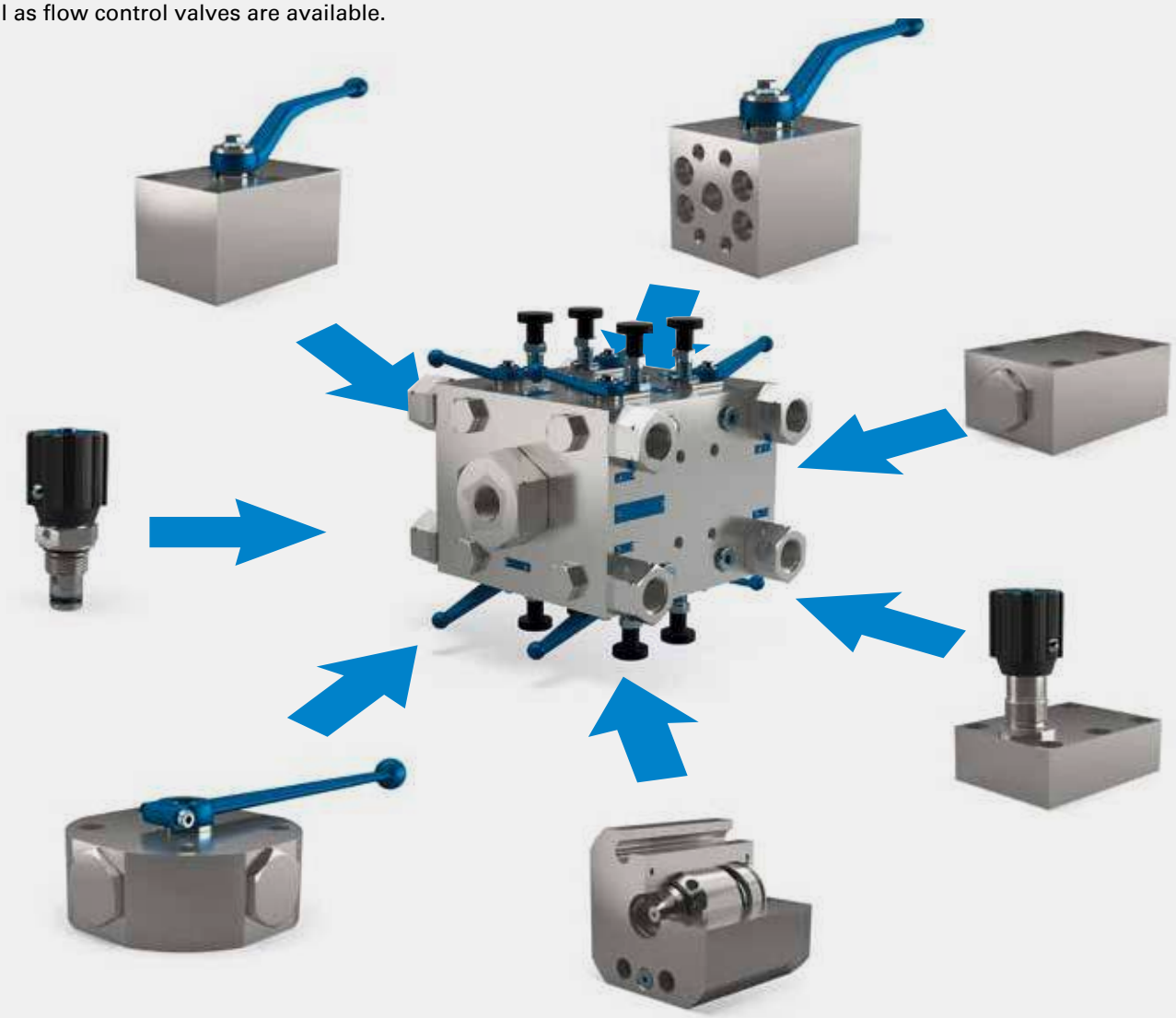

Looking for a ready-to-install solution?

We are able to supply complete manifold solutions with integrated valve components.

- Space saving
- Less potential leakage points

Certificates

MHA ZENTGRAF is certified according to the relevant pressure equipment directive CE and DIN EN ISO 9001 as well as the environmental standard DIN EN ISO 14001 and carries out acceptance procedures under the supervision of all notable classification societies such as ABS the American Bureau of Shipping, BV Bureau Veritas, CC China Classification, DNV Det Norske Veritas, GL Germanischer Lloyd, NK Nippon Kaiji Kyokal, TÜV Technischer Überwachungsverein.

If required, acceptance test certificates according to DIN EN 10204 3.1 and 3.2 can be issued. **MHA** ZENTGRAF fulfills the requirements under code of practice AD-Merkblatt HP 0. Fire-safe ball valves are supplied in compliance with BS 6755 T.2, API 6 FA and ISO 10497.

COMPANY				
ISO 9001:2015	de	en	fr	it
ISO 14001:2015	de	en	fr	it
PED/DGRL 2014/68/EU	de	en	fr	it
AD2000 HP-0	de	en	fr	
VdS approved manufacturer	de	en		

PRODUCT		
ATEX 2014/34/EU Declaration	de	en
Fire-Safe	de	en
DNV Type Approval		en
ABS Design Approval		en

OTHERS		
EAC	ru	
UKRSEPRO		ukr

Download: www.mha-zentgraf.com

MHA ZENTGRAF GmbH & Co. KG
Ballerner Strasse 8
66663 Merzig
Germany
Phone +49 6861 / 7000 - 0
Fax +49 6861 / 7000 - 77
info@mha-zentgraf.com
www.mha-zentgraf.com

MHA ZENTGRAF Flow Control Technology
(Shanghai) Co., Ltd.
T52-1 South, No. 1510, Chuan Qiao Road
Pudong, Shanghai, P.R.C. 201206
Phone +86 21 / 5899 2090
Fax +86 21 / 5899 6758
sales@mha-zentgraf.com.cn
www.mha-zentgraf.com.cn

MHA ZENTGRAF India
Pune, India
Phone: +91 800 799 97 96
brijesh.nandakumar@mha-zentgraf.com
info@mha-zentgraf.com
www.mha-zentgraf.com

MHA ZENTGRAF Corp.
25 John Glenn Dr
Buffalo, NY 14228
USA
Phone +1 716 / 243-4734
Fax +1 716 / 243-4735
ussales@mha-zentgraf.com
www.mha-zentgraf.com

After a custom solution?
- Speak with us now!