C

PRESSURE CONTROLS

Valve Type	Graphic Symbols	Max. Operating Pressure MPa	Max. Flow L/min (1 2 3 5 10 20 30 50 100 200 300 500 1000 2000)	Page
Remote Control Relief Valves		25	DT DG 01	C-3
Direct Type Relief Valves		21	DT/DG 02	C-5
Pilot Operated Relief Valves		25	BT/BG 03 06 10	C-7
Low Noise Type Pilot Operated Relief Valves		25	S-BG 03 06 10	C-11
Relief Valves (High Pressure Type)		35	B3G 03 06	C-14
Solenoid Controlled Relief Valves		25	BST/BSG 03 06 10	C-17
Solenoid Controlled Relief Valves (High Pressure Type)		35	B3SG 03 06	C-22
H/HC Type Pressure Control Valves		21	HT/HG HCT/HCG 03 06 10 HF16 HCF16	C-25
Pres. Reducing Valves Pres. Reducing and Check Valves		21	RT/RG RCT/RCG 03 06 10 RF RCF 16	C-36
Pressure Reducing and Relieving Valves		03 : 14 06 : 25	RBG 03 06	C-43
Brake Valves		25	UBGR 03 06 10	C-47
Unloading Relief Valves		21	BUCG 06 10	C-47
Semiconductor Type Pressure Switches		35	JT-02	C-48
Pressure Monitoring System		20 35		C-50

Hydraulic Fluids

Fluid Types

Any type of hydraulic fluids listed in the table below can be used.
Use any type of fluids, no change in specifications.

Petroleum base oils	Use fluids equivalent to ISO VG 32 or VG 46.
Synthetic fluids	Use phosphate ester or polyol ester fluid. When phosphate ester fluid is used, prefix "F-" to the model number because the special seals (fluororubber) are required to be used.
Water containing fluids	Use water-glycol fluid.

Note: For use with hydraulic fluids other than those listed above, please consult your Yuken representatives in advance.
Standard model of Semiconductor Type Pressure Switches can use with phosphate ester and W/O emulsion type fluids.

Recommended Fluid Viscosity and Temperature

Use under conditions where the viscosity and temperature of the hydraulic fluid remain in the ranges indicated in the following table.

Name		Viscosity	Temperature
Remote Control Relief Valves Direct Type Relief Valves Pilot Operated Relief Valves Low Noise Type Pilot Operated Relief Valves Relief Valves Solenoid Controlled Relief Valves★	H Type Pressure Control Valves HC Type Pressure Control Valves Pressure Reducing Valves Pressure Reducing and Check Valves Pressure Reducing and Relieving Valves	15 - 400 mm^2/s	–15 - +70°C
Semiconductor Type Pressure Switches		15 - 400 mm^2/s	–20 - +70°C

★ If the valve is provided with a vent ristrictor (ex. : A-BSG/B3SG), the viscosity range should be 15 - 200 mm^2/s.

Control of Contamination

Due caution must be paid to maintaining control over contamination of the hydraulic fluids which may otherwise lead to breakdowns and shorten the life of the valves. Please maintain the degree of contamination within NAS 1638-Grade 12. Use 25 μm or finer line filter.

Instructions

Drain Piping

It is necessary to connect the drain port directly to the reservoir with a back pressure close to the atmospheric pressure.
If neglect this process, there is the risks that system pressure will increase unlimitedly and occur serious accident.

Interchangeability in Installation between Current and New Design

Model change has been made on the following products.

Name	Model Numbers		Mounting Interchangeability	Major Changes	Page
	Current	New			
Solenoid Controlled Relief Valve	BS＊–03,–47	BS＊–03,–48	Yes	● Pilot valves (DSG-01) have been changed in the design numbers 70. ● There are no changes in specifications and mounting dimensions.	—
	BS＊–06,–47	BS＊–06,–48			
	BS＊–10,–47	BS＊–10,–48			

Remote Control Relief Valves

This valve is used as a remote control valve for pilot operated type pressure control valves.

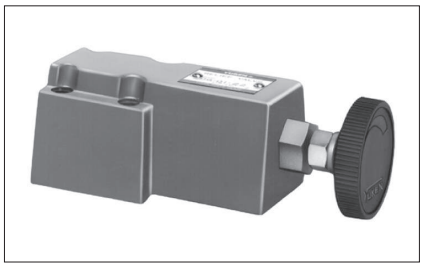

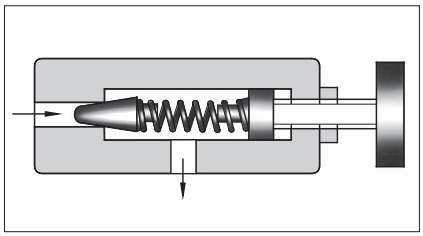

Specifications

Model Numbers		Max. Operating Pressure MPa	Approx. Mass kg	
Threaded Connection	Sub-plate Mounting		DT Type	DG Type
DT–01–22	DG–01–22	25	1.6	1.4

Model Number Designation

D	T	–01	–22
Series Number	Type of Mounting	Valve Size	Design Number
D : Remote Control Relief Valves	T : Threaded Connection	01	22
	G : Sub-plate Mounting		22

Graphic Symbol

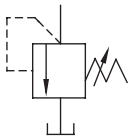

Accessories

Mounting Bolts

Valve Model Numbers	Socket Head Cap Screw
DG–01	M5□45L.....4 Pcs.

Sub-plate

Valve Model Numbers	Sub-plate Model Numbers	Thread Size Rc	Approx. Mass kg
DG–01	DGM–02–20	1/4	0.7

- Sub-plates are available. Specify the sub-plate model number from the table above. When sub-plates are not used, the mounting surface should have a good machined finish. (1.6▽)

Instructions

- To adjust the pressure, loosen the lock nut and turn the handle slowly clockwise for higher pressures or anti-clockwise for lower pressures. After adjustments, do not forget to tighten the lock nut.
- If the internal volume of the vent line is too large, chattering is likely to occur, so please use the pipes with 4mm inside diameter.
- Piping of the tank line should not be connected to any tank line of the other valves, but connected directly to the reservoir.
- In case of using for vent control, if pilot relief valve fully closed, the pressure of system is equal to the setting pressure of main valve.

DT–01

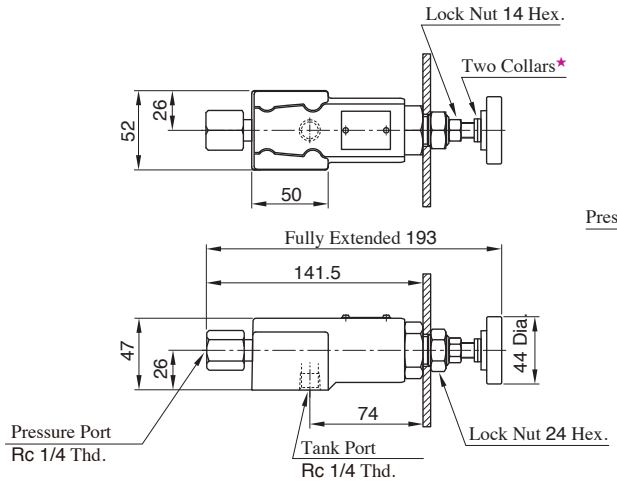

★ Pressure is limited by collars fitted. If a working pressure cannot be attained, remove some collars. One collar is equivalent to 10 MPa.

Pressure Adjustment Handle

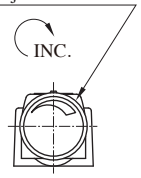

Dimensions of The Panel Mounting Hole

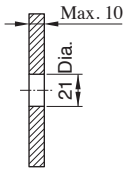

DG-01

★ Pressure is limited by collars fitted. If a working pressure cannot be attained, remove some collars. One collar is equivalent to 10 MPa.

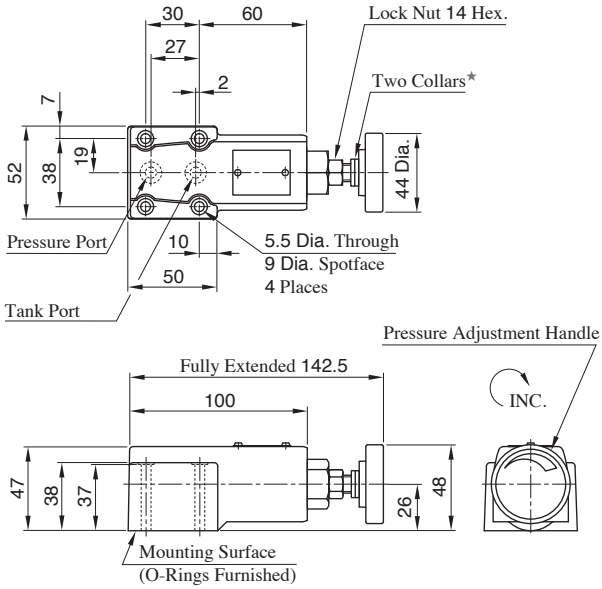

Sub-plate : DGM-02

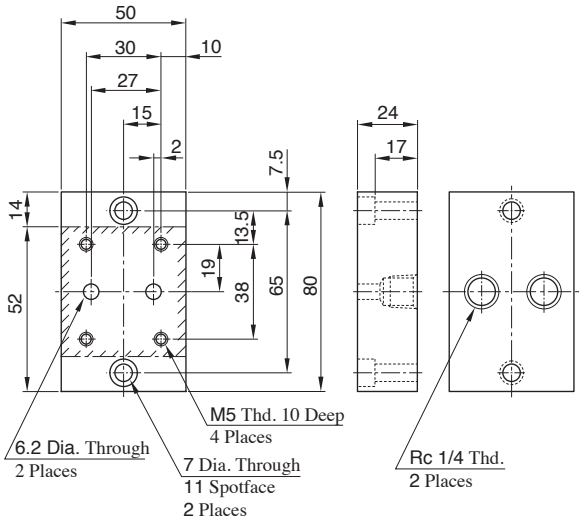

List of Seals

DT-01

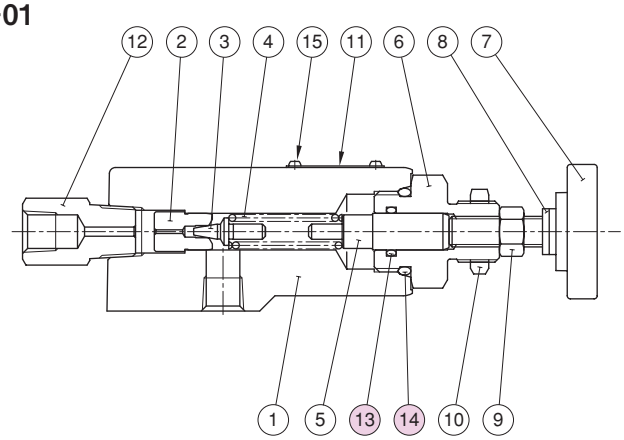

Item	Name of Parts	Part Numbers	Qty.
13	O-Ring	OR NBR-70-1 P12-N	1
14	O-Ring	OR NBR-90 P22.4-N	1

DG-01

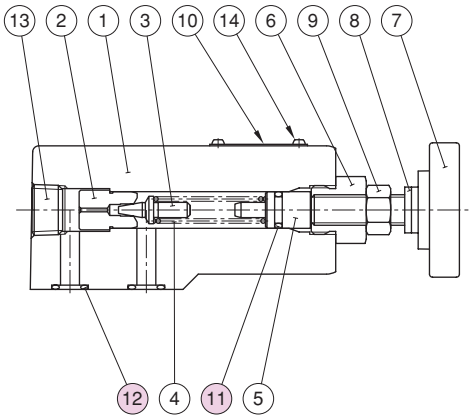

Item	Name of Parts	Part Numbers	Qty.
11	O-Ring	OR NBR-70-1 P9-N	1
12	O-Ring	OR NBR-90 P9-N	2

Direct Type Relief Valves

This valve is used in a hydraulic circuit to prevent damage due to over pressure and to adjust the maximum circuit pressure of small capacity.

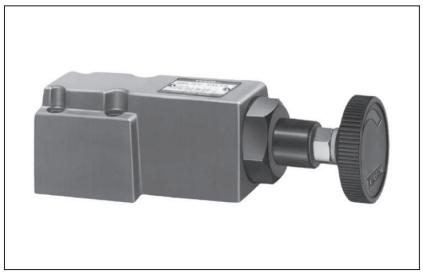

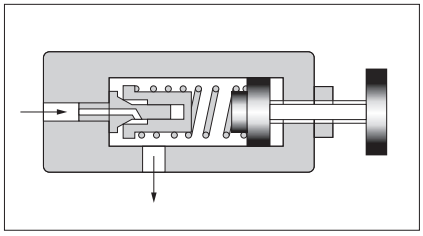

Specifications

Model Numbers		Max. Operating Pressure MPa	Pres. Adj. Range MPa	Max. Flow L/min	Approx. Mass kg	
Threaded Connection	Sub-plate Mounting				DT Type	DG Type
DT–02–＊–22	DG–02–＊–22	21	★	16	1.5	1.5

★ Refer to the model number designation.

Model Number Designation

D	T	–02	– B	–22
Series Number	Type of Mounting	Valve Size	Pres. Adj. Range	Design Number
D : Direct Type Relief Valves	T : Threaded Connection	02	B : ★ - 7 C : 3.5 - 14 H : 7 - 21	22
	G : Sub-plate Mounting			22

★ Refer to the minimum adjustment pressure characteristics.

Graphic Symbol

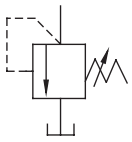

Instructions

- To adjust the pressure, loosen the lock nut and turn the handle slowly clockwise for higher pressures or anti-clockwise for lower pressures. After adjustments, do not forget to tighten the lock nut.
- Piping of the tank line should not be connected to any tank line of the other valves, but connected directly to the reservoir.

Accessories

Mounting Bolts

Valve Model Numbers	Socket Head Cap Screw
DG–02	M5□45L……4 Pcs.

Sub-plate

Valve Model Numbers	Sub-plate Model Numbers	Thread Size Rc	Approx. Mass kg
DG–02	DGM–02–20	1/4	0.7

- Sub-plates are available. Specify the sub-plate model number from the table above. When sub-plates are not used, the mounting surface should have a good machined finish. (1.6/)
- The sub-plates are those for remote control relief valves. For dimensions, see page C-4.

Min. Adjustment Pressure

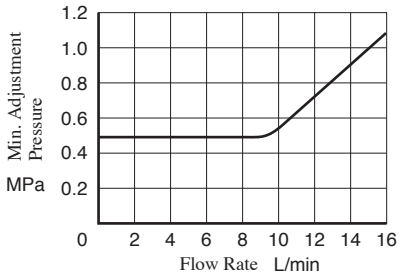

Nominal Override Characteristics

Hydraulic fluid
Viscosity : 35 mm□/s
Specific Gravity : 0.850

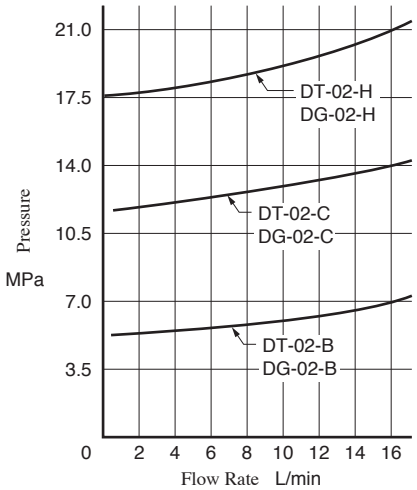

DT-02

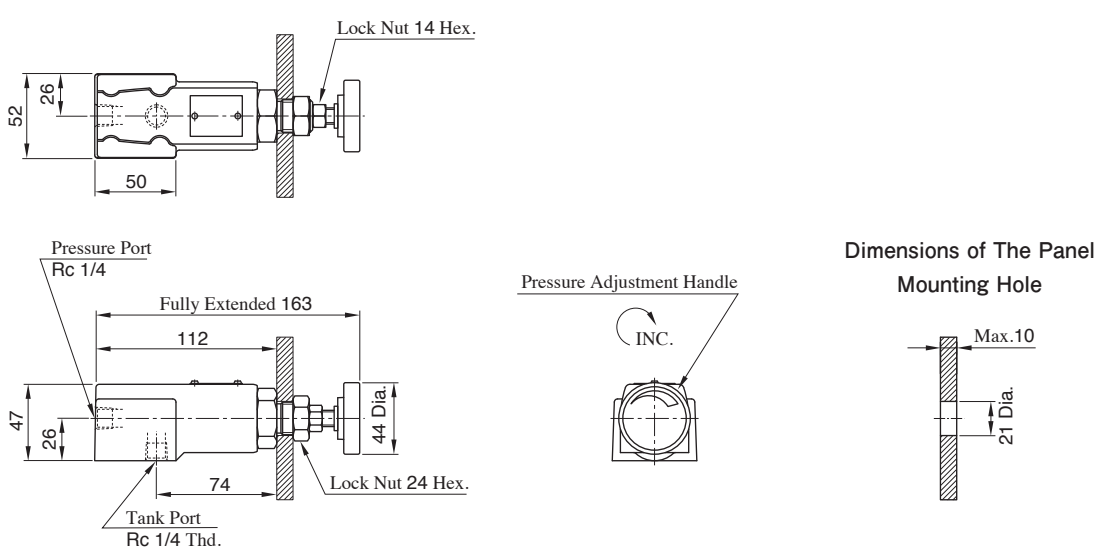

DG-02

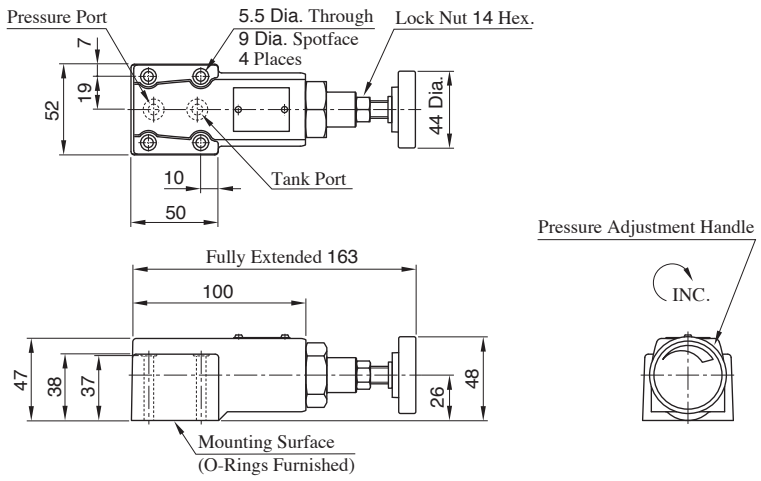

Note: For dimensions of the valve mounting surface, see the dimensional drawing (page C-4) of the sub-plate used together.

List of Seals

DT-02
DG-02

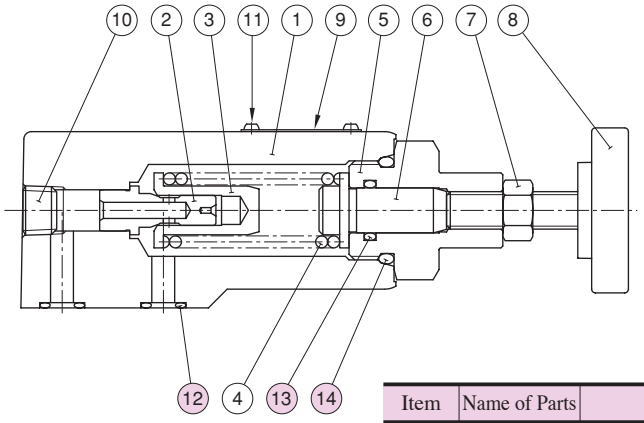

Item	Name of Parts	Part Numbers	Qty.	Remarks
12	O-Ring	OR NBR-90 P9-N	2	Use only for DG-02
13	O-Ring	OR NBR-70-1 P12-N	1	
14	O-Ring	OR NBR-90 P22.4-N	1	

Pilot Operated Relief Valves

These valves protect the hydraulic system from excessive pressure, and can be used to maintain constant pressure in a hydraulic system. Remote control and unloading are permitted by using vent circuits.

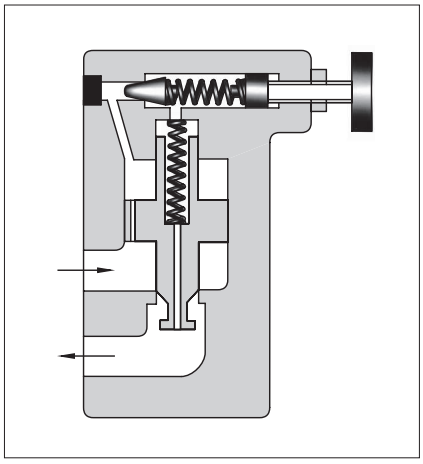

Specifications

Model Numbers		Max. Operating Pressure MPa	Pres. Adj. Range MPa	Max. Flow L/min	Approx. Mass kg	
Threaded Connection	Sub-plate Mounting				BT Type	BG Type
BT-03-＊-32	BG-03-＊-32	25	★ - 25	100	5.0	4.7
BT-06-＊-32	BG-06-＊-32			200	5.0	5.6
BT-10-＊-32	BG-10-＊-32			400	8.5	8.7

★ Refer to the minimum adjustment pressure characteristics on page C-10.
● For large flow valves (flange connect type), please contact us.

Model Number Designation

B	T	−03	−V	−32
Series Number	Type of Mounting	Valve Size	High Venting ★ Pres. Feature	Design Number
B : Pilot Operated Relief Valves	T : Threaded Connection	03	V : For High Venting Pressure Feature (Omit if not required)	32
		06		32
		10		32
	G : Sub-plate Mounting	03		32
		06		32
		10		32

★ Use high venting pressure type to reduce the changeover time from unload to onload.

Graphic Symbols

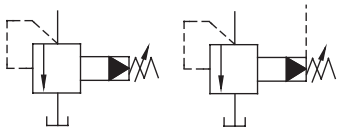

Vent Connection

Accessories

● Mounting Bolts

Valve Model Numbers	Socket Head Cap Screw
BG-03	M12□70L…2 Pcs., M12□95L…2 Pcs.
BG-06	M16□60L…2 Pcs., M16□80L…2 Pcs.
BG-10	M20□70L…2 Pcs., M20□90L…2 Pcs.

Sub-plates

Valve Model Numbers	Sub-plate Model Numbers	Thread Size Rc	Approx. Mass kg
BG-03	BGM-03-20	3/8	2.4
	BGM-03X-20	1/2	3.1
BG-06	BGM-06-20	3/4	4.7
	BGM-06X-20	1	5.7
BG-10	BGM-10-20	1 1/4	8.4
	BGM-10X-20	1 1/2	10.3

● Sub-plates are available. Specify the sub-plate model number from the table above. When sub-plates are not used, the mounting surface should have a good machined finish. (1.6/)

Instructions

- If a remote control relief valve is used in the vent circuit, see page C-5. In addition, if the internal volume of the vent line is too large, chattering is likely to occur. Thus, as far as possible reduce the inside diameter and the length of the pipe.
- To adjust the pressure, loosen the lock nut and turn the handle slowly clockwise for higher pressures or anti-clockwise for lower pressures. After adjustments, do not forget to tighten the lock nut.
- Piping of the tank line should not be connected to any tank line of the other valves, but connected directly to the reservoir.
- With a small flow, the setting pressure may be unstable. Use with a flow rate above the minimum flow as the right chart.

Valve Size	Min. Flow
03	8 L/min
06	
10	15 L/min

BT-03, 06, 10

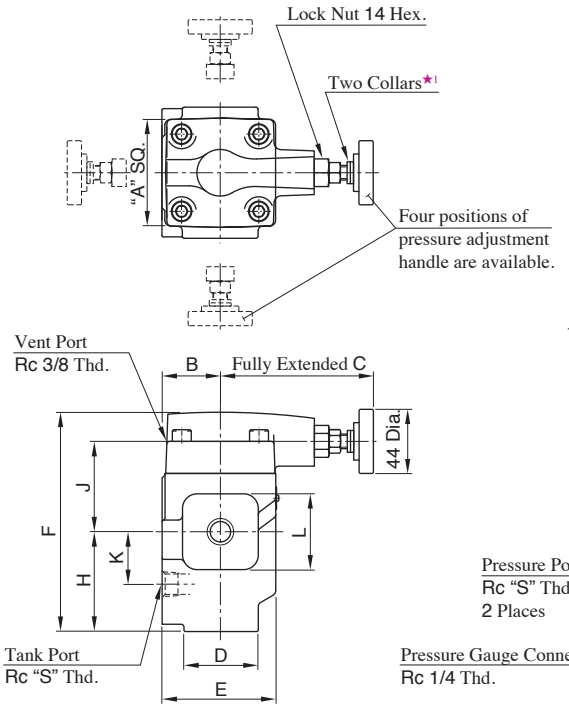

Model Numbers	A	B	C	D	E	F
BT–03	75	40	105	52	78	150.5
BT–06						
BT–10	85	50	101	80	96	183

Model Numbers	H	J	K	L	N	Q	S
BT–03	68.5	62	36	52	90	45	3/8
BT–06							3/4
BT–10	89	74	49	80	120	60	1 1/4

★1. Pressure is limited by collars fitted. If a working pressure cannot be attained, remove some collars. One collar is equivalent to 10 MPa.

★2. There are two threaded connection pressure ports. They can be connected each other in-line; one as inlet and the other as an outlet or the valve can be used by plugging one of the pressure ports.

BG-03, 06, 10

★ Pressure is limited by collars fitted. If a working pressure cannot be attained, remove some collars. One collar is equivalent to 10 MPa.

Mounting Surface
BG-03 : ISO 6264-06-09-1-97
BG-06 : ISO 6264-08-13-1-97
BG-10 : ISO 6264-10-17-1-97

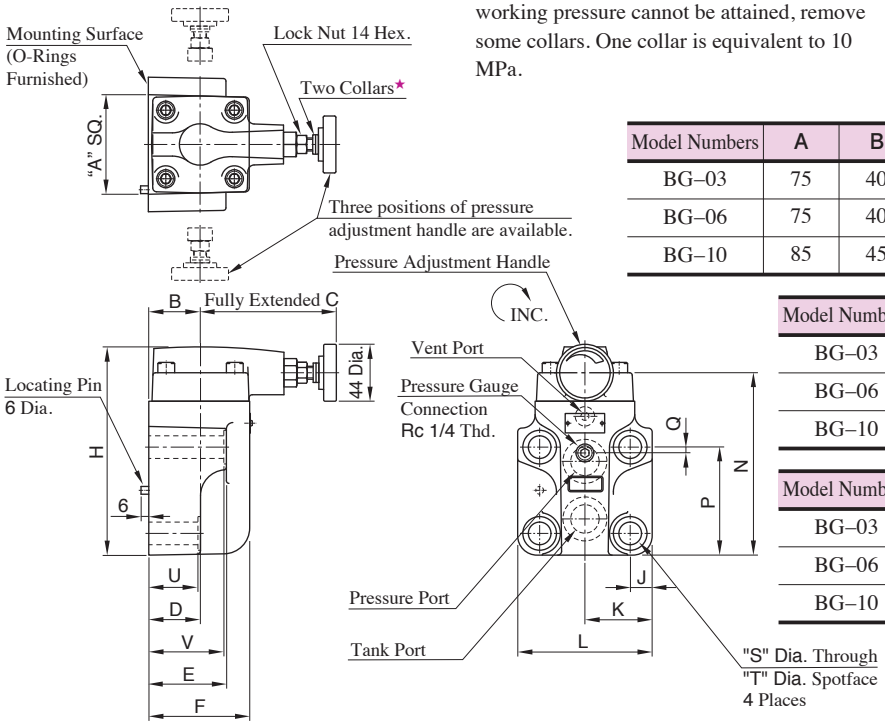

Model Numbers	A	B	C	D	E	F	H
BG–03	75	40	105	57	78	78	137
BG–06	75	40	105	40	60	78	161
BG–10	85	45	101	47	67	84	195

Model Numbers	J	K	L	N	P
BG–03	14.1	41	82	117	77
BG–06	17	52	104	141	83.5
BG–10	20.7	62	124	175	110

Model Numbers	Q	S	T	U	V
BG–03	22	13.5	21	55	77
BG–06	4.5	17.5	26	38	58
BG–10	6	21.5	32	45	65

Sub-plate
BGM−03, 03X
06, 06X
10, 10X

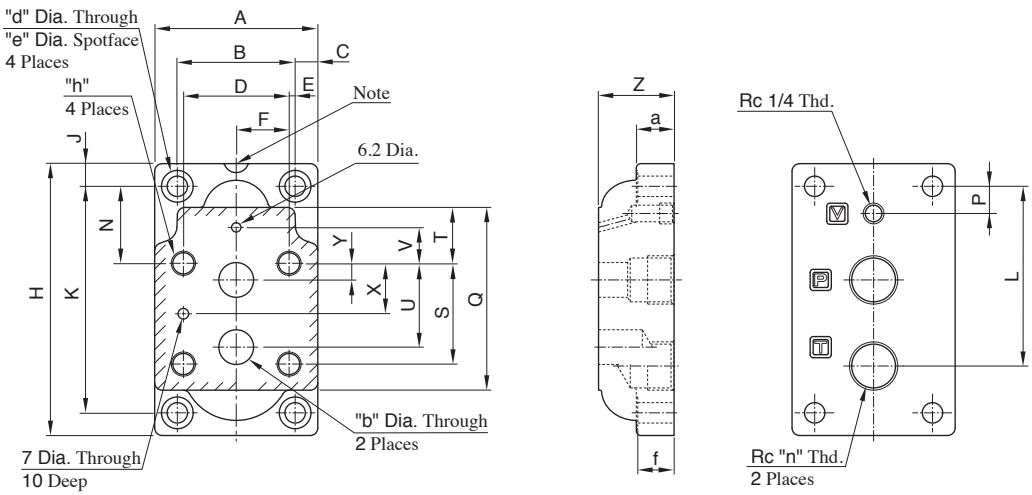

Note) There is the cavity only for BGM-＊X.

Model Numbers	A	B	C	D	E	F	H	J	K	L	N	P	Q	S
BGM-03	86	60	13	53.8	3.1	26.9	149	13	123	86	32	26	97	53.8
BGM-03X										95		21		
BGM-06	108	78	15	70	4	35	180	15	150	106.5	51	27.2	121	66.7
BGM-06X										119		18		
BGM-10	126	94	16	82.6	5.7	41.3	227	16	195	138.2	62	30.2	154	88.9
BGM-10X										158		17		

Model Numbers	T	U	V	X	Y	Z	a	b	d	e	f	h	n
BGM-03	19	47.4	0	22	22	32	20	14.5	11	17.5	19	M12 Thd. 20 Deep	3/8
BGM-03X						40							1/2
BGM-06	37	55.5	23.8	33.4	11	40	25	23	13.5	21	24	M16 Thd. 25 Deep	3/4
BGM-06X						50							1
BGM-10	42	76.2	31.8	44.5	12.7	50	32	28	17.5	26	31	M20 Thd. 28 Deep	1 1/4
BGM-10X						63							1 1/2

Nominal Override Characteristics

Hydraulic Fluid: Viscosity : 35 mm²/s
Specific Gravity : 0.850

BT-03, BG-03

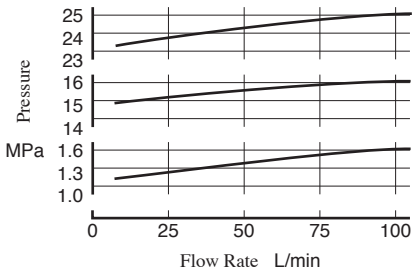

BT-06, BG-06

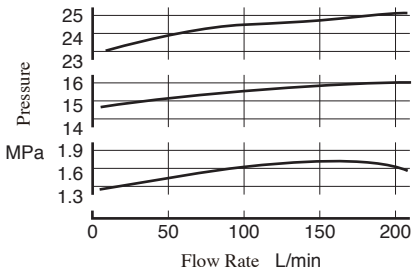

BT-10, BG-10

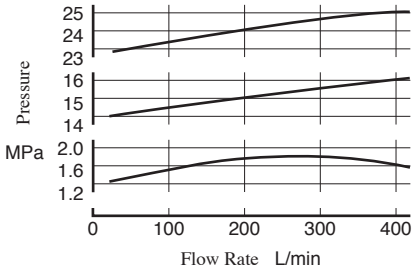

Min. Adj. Pressure & Vent Pressure vs. Flow

Hydraulic Fluid: Viscosity : 35 mm□/s
Specific Gravity : 0.850

Vent Pressure
Min. Adjustment Pressure

BT-03, BG-03

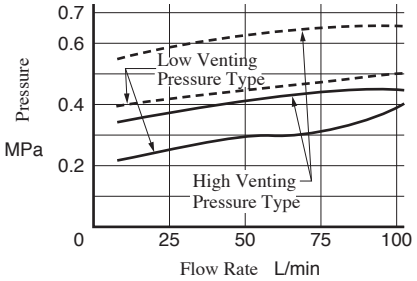

BT-06, BG-06

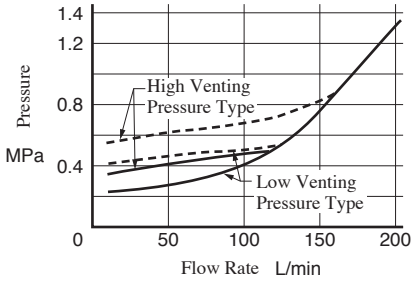

BT-10, BG-10

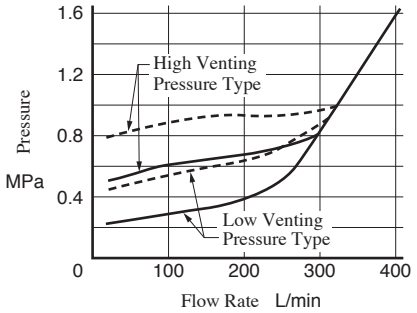

Note) Venting Pressure is the relieving pressure when the vent port open to tank port.

List of Seals

BT-03, 06, 10

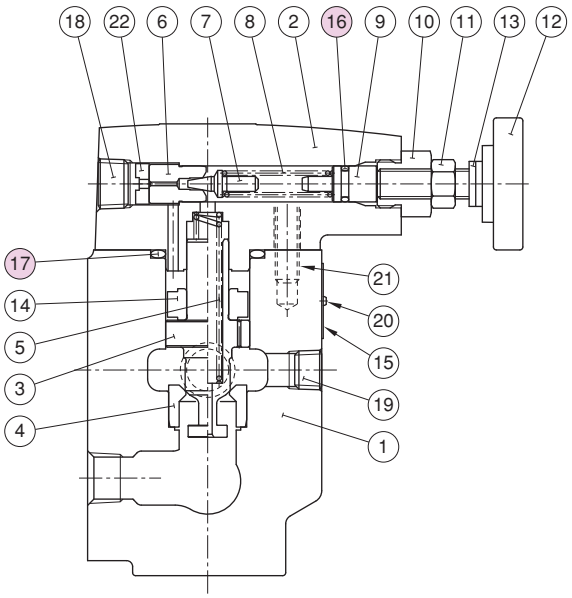

Item	Name of Parts	Part Numbers			Qty.
		BT-03	BT-06	BT-10	
16	O-Ring	OR NBR-70-1 P9-N	OR NBR-70-1 P9-N	OR NBR-70-1 P9-N	1
17	O-Ring	OR NBR-90 P32-N	OR NBR-90 P32-N	OR NBR-90 P32-N	1

BG-03, 06, 10

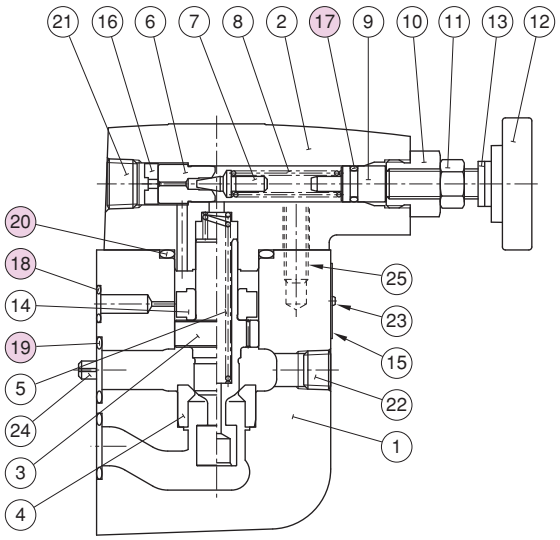

Item	Name of Parts	Part Numbers			Qty.
		BG-03	BG-06	BG-10	
17	O-Ring	OR NBR-70-1 P9-N	OR NBR-70-1 P9-N	OR NBR-70-1 P9-N	1
18	O-Ring	OR NBR-90 P9-N	OR NBR-90 P11-N	OR NBR-90 P9-N	1
19	O-Ring	OR NBR-90 P18-N	OR NBR-90 P28-N	OR NBR-90 P32-N	2
20	O-Ring	OR NBR-90 P32-N	OR NBR-90 P32-N	OR NBR-90 P42-N	1

Low Noise Type Pilot Operated Relief Valves

Pilot operated relief valves here have been particularly developed as low-noise types. Able to protect pumps and control valves against excessive pressures, they are used to control the pressure in the hydraulic system to a constant level.
Remote control and unloading are permitted by using vent circuits.

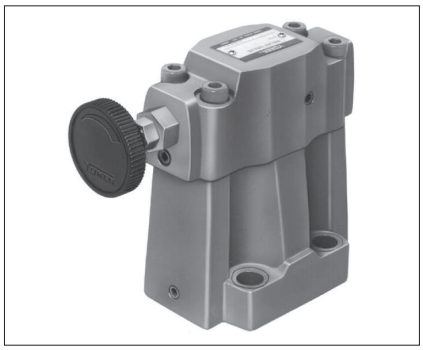

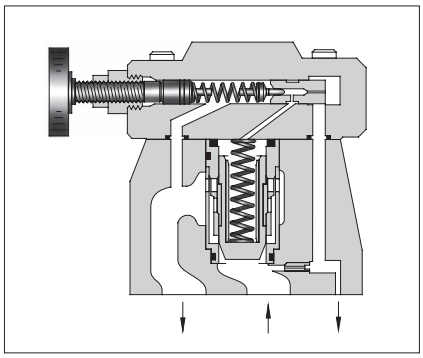

Specifications

Model Numbers	Max. Operating Pres. MPa	Pres. Adj. Range MPa	Max. Flow L/min	Approx. Mass kg
S-BG-03-∗-∗-40	25	★ - 25	100	4.1
S-BG-06-∗-∗-40			200	5.0
S-BG-10-∗-40			400	10.5

★ See minimum adjustment pressure characteristics on page C-12.

Model Number Designation

S−	B	G	−03	−V	−L	−40
Low Noise Type	Series Number	Type of Mounting	Valve Size	High Venting Pres. Feature★	Direction of Handle	Design Number
S : Low Noise Type	B : Pilot Operated Relief Valves	G : Sub-plate Mounting	03	V : For High Venting Pressure Feature (Omit if not required)	(Viewed from pressure gauge connection) L: Left (Normal) R: Right	40
			06			40
			10		———	40

★ Use the high venting pressure type where it is necessary to reduce the changeover time from unloading to onloading.

Graphic Symbols

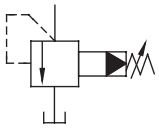

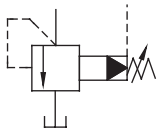

Vent Connection

We also product The Low Noise Type Solenoid Controlled Relief Valves as below. For more details, please contact us.

Model Numbers	Max. Operating Pres. MPa	Max. Flow L/min
S-BSG-03-∗-∗-∗-∗-∗-53	25	100
S-BSG-06-∗-∗-∗-∗-∗-53		200
S-BSG-10-∗-∗-∗-∗-53		400

Instructions

- If a remote control relief valve is used in the vent circuit, see page C-5. In addition, if the internal volume of the vent line is too large, chattering is likely to occur. Thus, as far as possible reduce the inside diameter and the length of the pipe.
- To adjust the pressure, loosen the lock nut and turn the handle slowly clockwise for higher pressures or anti-clockwise for lower pressures. After adjustments, do not forget to tighten the lock nut.
- Piping of the tank line should not be connected to any tank line of the other valves, but connected directly to the reservoir.
- With a small flow, the setting pressure may be unstable. Use with minimum flow rate as the table below.

Valve Size	Min. Flow
03	5 L/min
06	
10	8 L/min

Accessories

Mounting Bolts

Valve Model Numbers	Socket Head Cap Screw
S-BG-03	M12□40L …… 4 Pcs.
S-BG-06	M16□50L …… 4 Pcs.
S-BG-10	M20□60L …… 4 Pcs.

Sub-plates

Valve Model Numbers	Sub-plate Model Numbers	Thread Size Rc	Approx. Mass kg
S-BG-03	BGM-03-20	3/8	2.4
	BGM-03X-20	1/2	3.1
S-BG-06	BGM-06-20	3/4	4.7
	BGM-06X-20	1	5.7
S-BG-10	BGM-10-20	1 1/4	8.4
	BGM-10X-20	1 1/2	10.3

- Sub-plates are available. Specify the sub-plate model number from the table above. When sub-plates are not used, the mounting surface should have a good machined finish. (1.6)
- The sub-plates are those for pilot operated relief valves. For dimensions, see page C-9.

S-BG-$\frac{03}{06}$-＊-L-40

S-BG-10-＊-40

★ Pressure is limited by collars fitted. If a working pressure cannot be attained, remove some collars. One collar is equivalent to 10 MPa.

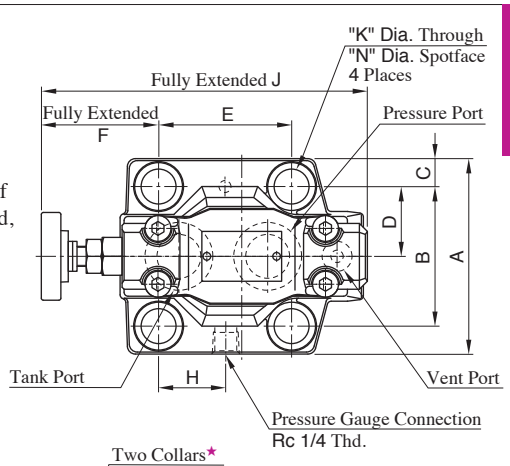

Mounting Surface
S-BG-03 : ISO 6264-06-09-1-97
S-BG-06 : ISO 6264-08-13-1-97
S-BG-10 : ISO 6264-10-17-1-97

Opposite Handle Position

S-BG-$\frac{03}{06}$-＊-R

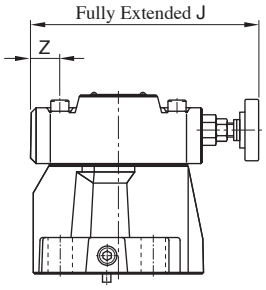

For other dimensions, see the figures shown left.

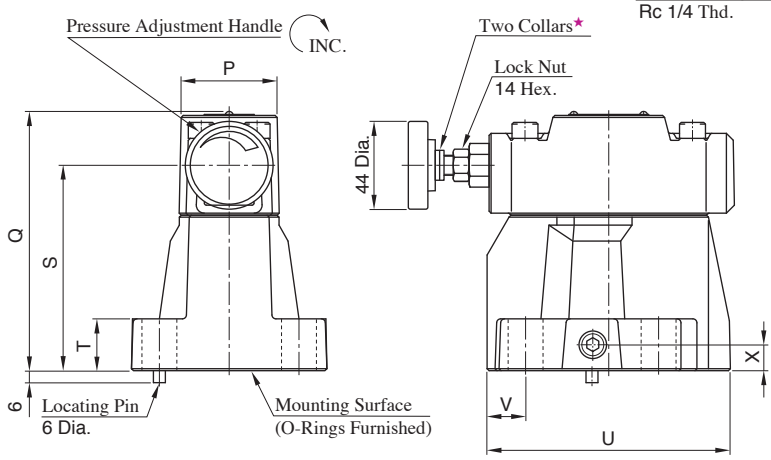

Note: For dimensions of the valve mounting surface, see the dimensional drawing (Page C-9) of the sub-plate used together.

Model Numbers	A	B	C	D	E	F	H	J	K	N	P	Q	S	T	U	V	X	Z
S-BG-03	76	53.8	11.1	26.9	53.8	73.6	26.9	163.5	13.5	21	50	130	103	21.5	106	26.1	13	36.1
S-BG-06	98	70	14	35	66.7	58.8	33.7	163.5	17.5	26	50	130	103	26	122	19.3	13	21.3
S-BG-10	120	82.6	18.7	41.3	88.9	46.1	44.9	180	21.5	32	65	167	135	33.5	155	21.1	18	——

Nominal Override Characteristics

Hydraulic Fluid : Viscosity : 35 mm□/s
Specific Gravity : 0.850

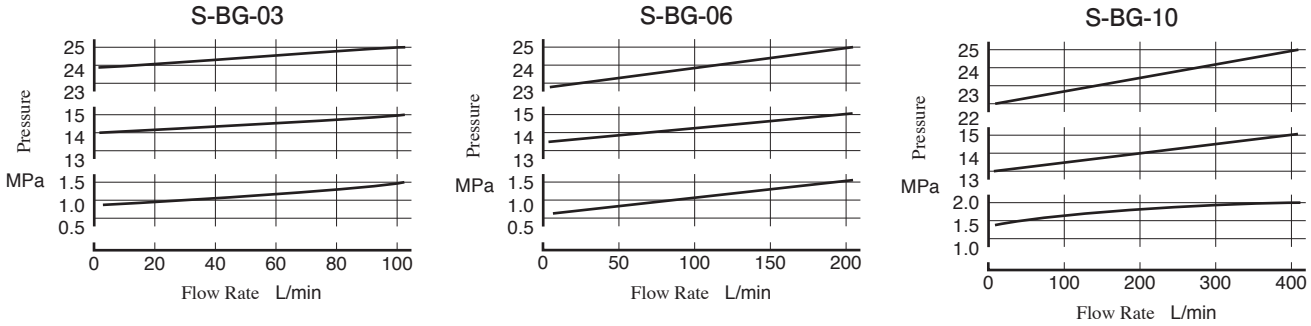

Min. Adj. Pressure and Vent Pressure vs. Flow

Hydraulic Fluid: Viscosity : 35 mm□/s
Specific Gravity : 0.850

Vent Pressure
Min. Adjustment Pressure

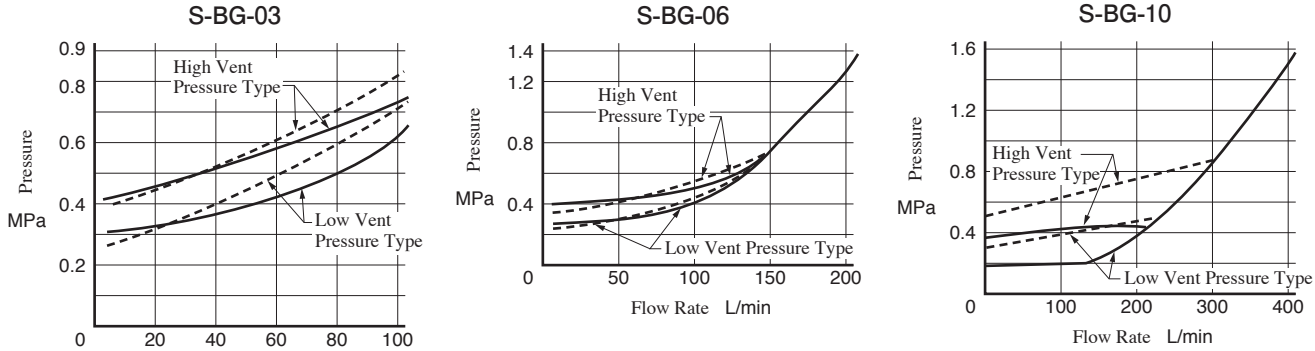

Note: Vent Pressure means the relief pressure when the vent part open to the tank line.

Noise Level

Measuring Condition
Back Pressure : 0.1 MPa Viscosity : 35 mm²/s Measuring Position : At 1m back from the valve front.

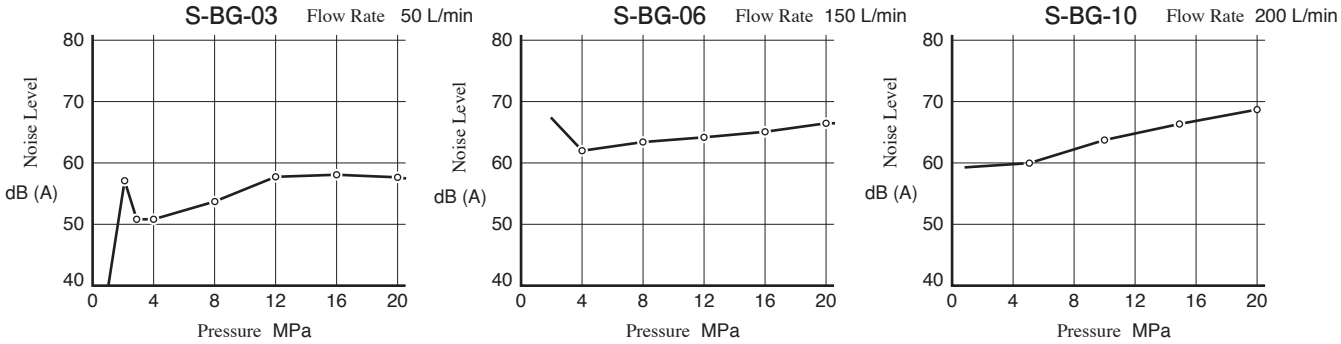

List of Seals

S-BG-03, 06, 10

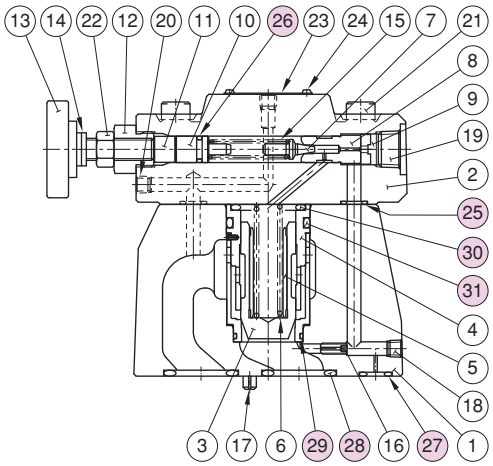

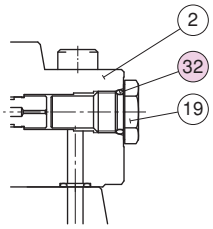

S-BG-10

Item	Name of Parts	Part Numbers			Qty.
		S-BG-03	S-BG-06	S-BG-10	
25	O-Ring	OR NBR-90 P9-N	OR NBR-90 P9-N	OR NBR-90 P9-N	2
26	O-Ring	OR NBR-70-1 P9-N	OR NBR-70-1 P9-N	OR NBR-70-1 P9-N	1
27	O-Ring	OR NBR-90 P9-N	OR NBR-90 P11-N	OR NBR-90 P9-N	1
28	O-Ring	OR NBR-90 P18-N	OR NBR-90 P28-N	OR NBR-90 P32-N	2
29	O-Ring	AS 568-024 (NBR-90)	AS 568-024 (NBR-90)	AS 568-128 (NBR-90)	1
30	O-Ring	OR NBR-90 P28-N	OR NBR-90 P28-N	OR NBR-90 P36-N	1
31	O-Ring	OR NBR-90 P32-N	OR NBR-90 P32-N	OR NBR-90 P42-N	1
32	O-Ring	———————	———————	OR NBR-90 P14-N	1

Interchangeability Between Conventional Type and Low Noise Type

The 40 design of low noise type S-BG-03, 06, 10 has mounting interchangeability with the 32 design of conventional type BG-03, 06, 10. But the outside shape is different, for example the direction of pressure adjustment handle.

Conventional Type : BG-03/06/10, 32Design

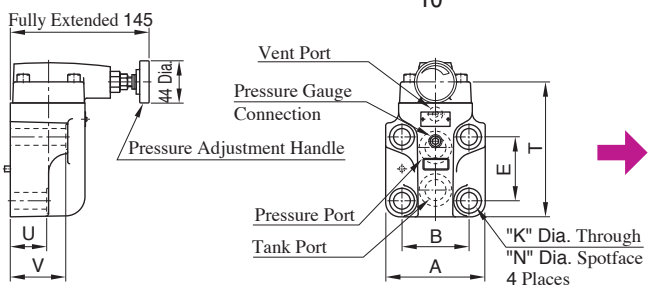

Low noise Type : S-BG-03/06/10, 40 Design

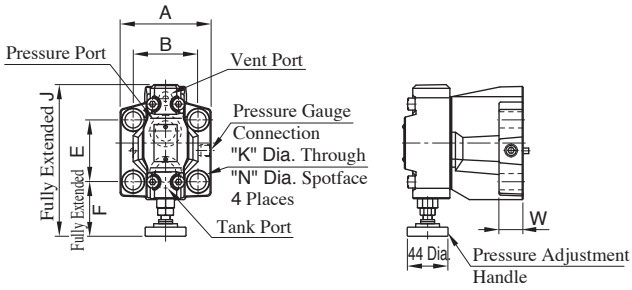

Model Numbers	A	B	E	K	N	T	U	V
BG-03	82	53.8	53.8	13.5	21	117	55	78
BG-06	104	70	66.7	17.5	26	141	38	58
BG-10	124	82.6	88.9	21.5	32	175	45	65

Model Numbers	A	B	E	F	K	N	J	W
S-BG-03	76	53.8	53.8	73.6	13.5	21	163.5	20.5
S-BG-06	98	70	66.7	58.8	17.5	26	163.5	25
S-BG-10	120	82.6	88.9	50.6	21.5	32	180	32.5

Relief Valves (High Pressure Type)

Relief valves here have been particularly developed those be able to adjust pressure to high level of 35 MPa. Able to protect pumps and control valves against excessive pressures, they are used to control the pressure in the hydraulic system to a constant level.
Remote control and unloading are permitted by using vent circuits.

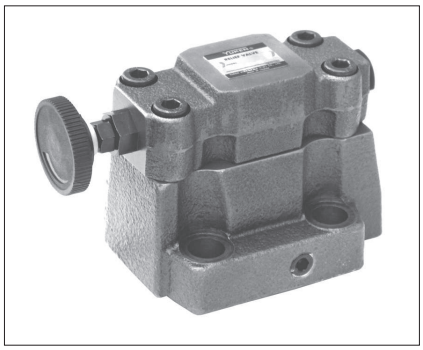

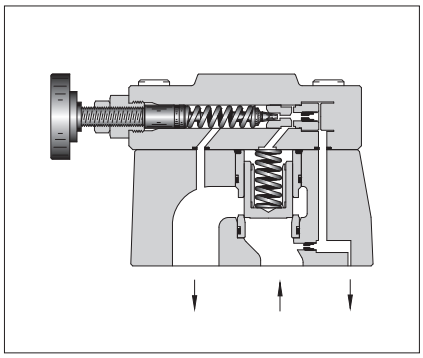

Specifications

Model Numbers	Max. Operating Pres. MPa	Pres. Adj. Range MPa	Max. Flow L/min	Approx. Mass kg
B3G–03–＊–10	35	★ - 35	250	4.1
B3G–06–＊–10			500	5.1

★ See minimum adjustment pressure characteristics on page C-15.

Model Number Designation

B3	G	−03	−V	−10
Series Number	Type of Mounting	Valve Size	High Venting★ Pres. Feature	Design Number
B3 : Relief Valves (High Pressure Type)	G : Sub-plate Mounting	03	V : For High Venting Pressure Feature (Omit if not required)	10
		06		10

★ Use the high venting pressure type where it is necessary to reduce the changeover time from unloading to onloading.

Graphic Symbols

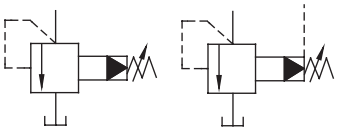

Vent Connection

Accessories

Mounting Bolts

Valve Model Numbers	Socket Head Cap Screw
B3G-03	M12□40L …… 4 Pcs.
B3G-06	M16□50L …… 4 Pcs.

Instructions

- When control in the vent circuit, if the internal volume of the vent line is too large, chattering is likely to occur. Thus, as far as possible reduce the inside diameter and the length of the pipe.
- To adjust the pressure, loosen the lock nut and turn the handle slowly clockwise for higher pressures or anti-clockwise for lower pressures. After adjustments, do not forget to tighten the lock nut.
- Piping of the tank line should not be connected to any tank line of the other valves, but connected directly to the reservoir.
- With a small flow, the setting pressure may be unstable. Use with the minimum flow rate as the below chart.

Valve Size	Min. Flow
03	5 L/min
06	

Sub-plates

Valve Model Numbers	Sub-plate Model Numbers	Thread Size Rc	Approx. Mass kg
B3G-03	BGM-03-20	3/8	2.4
	BGM-03X-20	1/2	3.1
B3G-06	BGM-06-20	3/4	4.7
	BGM-06X-20	1	5.7

- Sub-plates are available. Specify the sub-plate model number from the table above. When sub-plates are not used, the mounting surface should have a good machined finish. (1.6/▽)
- The sub-plates are those for pilot operated relief valves. For dimensions, see page C-9.

B3G-$\frac{03}{06}$-＊-10

Mounting Surface
B3G-03 : ISO 6264-06-09-1-97
B3G-06 : ISO 6264-08-13-1-97

★ Pressure is limited by collars fitted. If a working pressure cannot be attained, remove some collars. One collar is equivalent to 14 MPa.

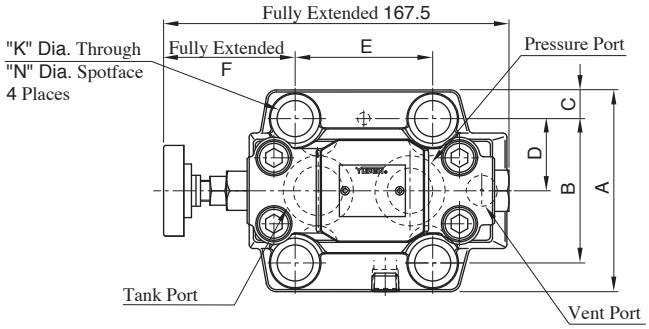

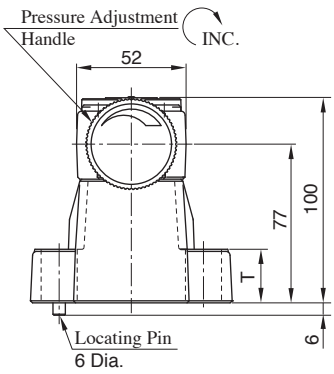

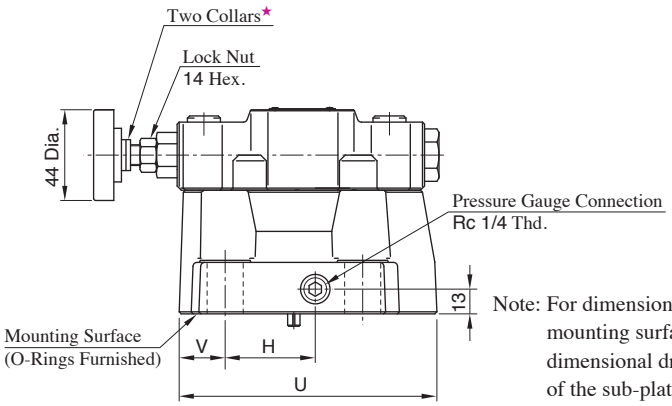

Note: For dimensions of the valve mounting surface, see the dimensional drawing (Page C-9) of the sub-plate used together.

Model Numbers	A	B	C	D	E	F	H	K	N	T	U	V
B3G–03	76	53.8	11.1	26.9	53.8	74.6	29.3	13.5	21	21.5	111	31.2
B3G–06	100	70	15	35	66.7	63.8	43.7	17.5	27	26	125	22.3

Nominal Override Characteristics

Hydraulic Fluid: Viscosity : 35 mm□/s
Specific Gravity : 0.850

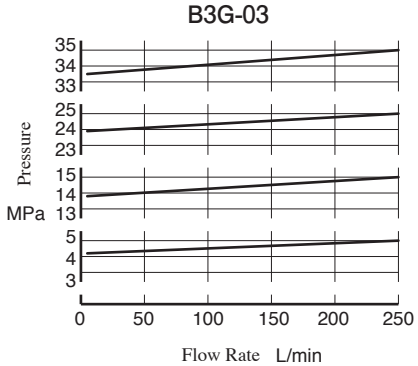

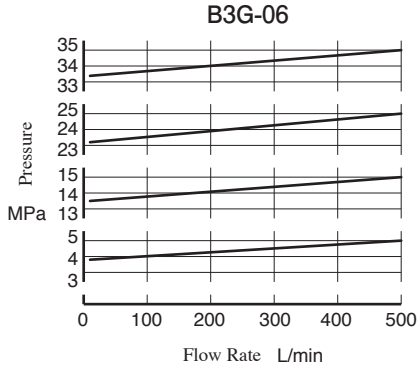

Min. Adj. Pressure and Vent Pressure vs. Flow

Hydraulic Fluid: Viscosity : 35 mm□/s
Specific Gravity : 0.850

Vent Pressure
Min. Adjustment Pressure

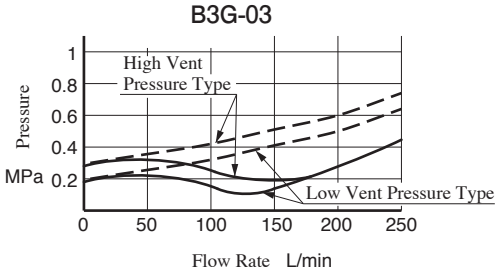

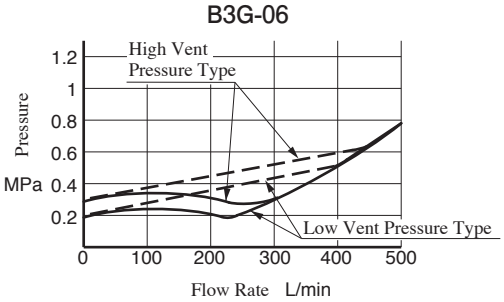

Note: Vent Pressure means the relief pressure when the vent part open to the tank line.

List of Seals

B3G-03, 06

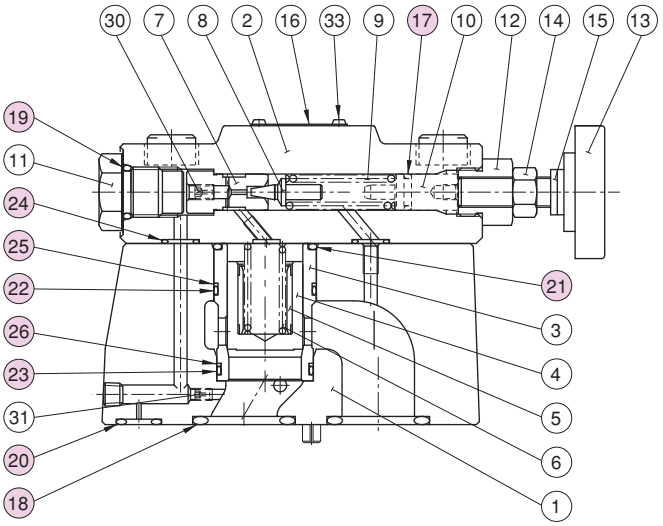

Item	Name of Parts	Part Numbers		Qty.
		B3G-03	B3G-06	
17	O-Ring	OR NBR-70-1 P9-N	OR NBR-70-1 P9-N	1
18	O-Ring	OR NBR-90 P18-N	OR NBR-90 P28-N	2
19	O-Ring	OR NBR-90 P14-N	OR NBR-90 P14-N	1
20	O-Ring	OR NBR-90 P9-N	OR NBR-90 P11-N	1
21	O-Ring	AS568-123 (NBR-90)	AS568-123 (NBR-90)	1
22	O-Ring	AS568-025 (NBR-90)	AS568-025 (NBR-90)	1
23	O-Ring	AS568-024 (NBR-90)	AS568-024 (NBR-90)	1
24	O-Ring	AS568-012 (NBR-90)	AS568-012 (NBR-90)	2
25	Back-up Ring	SO-BRB-34	SO-BRB-34	1
26	Back-up Ring	SO-BRB-32	SO-BRB-32	1

Solenoid Controlled Relief Valves

The solenoid controlled relief valve is a combination of a pilot operated relief valve and a solenoid operated directional valve. It is used for no-load pump operation by using electric signals or, together with a remote control relief valve, for two or three pressure control of the hydraulic system.

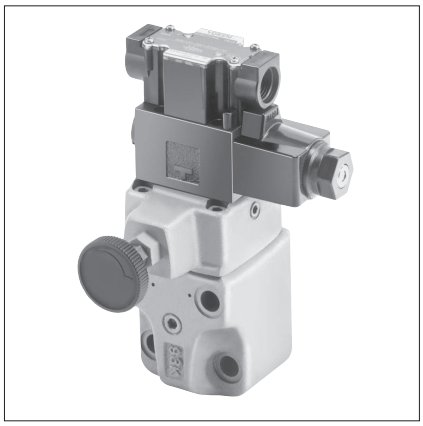

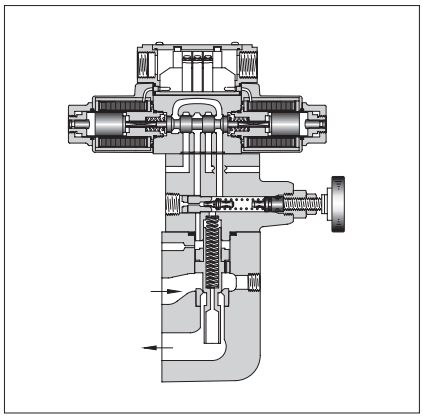

Specifications

Model Numbers		Max. Operating Pres. MPa	Pres. Adj. Range MPa	Max. Flow L/min	Approx. Mass kg
Threaded Connection	Sub-plate Mounting				
BST-03-∗-∗-∗-∗-48	BSG-03-∗-∗-∗-∗-48	25	★ - 25	100	See the chart below.
BST-06-∗-∗-∗-∗-48	BSG-06-∗-∗-∗-∗-48			200	
BST-10-∗-∗-∗-∗-48	BSG-10-∗-∗-∗-∗-48			400	

★ For relief valves, standard pilot operated relief valves are used.
For minimum adjustment pressures and other characteristics, see pages C-9 & C-10.
● For large flow valves (flange connection type), please contact us.

Approx. Mass

Model Numbers	Double Sol.	Single Sol.	With Vent Restrictor
BST-03	7.1 kg	6.6 kg	7.6 kg
BST-06	7.1 kg	6.6 kg	7.6 kg
BST-10	10.8 kg	10.3 kg	11.3 kg
BSG-03	6.8 kg	6.3 kg	7.3 kg
BSG-06	7.7 kg	7.2 kg	8.2 kg
BSG-10	11.0 kg	10.5 kg	11.5 kg

Model Number Designation

A−	BS	T	−03	− V	−2B3A	−A100	− N	−48
With Vent★1 Restrictor	Series Number	Type of Mounting	Valve Size	High Venting★2 Pres. Feature	Vent Type★3	Coil Type★4	Type of Electrical Con.	Design Number
A : With Vent Restrictor (Option) (Omit if not required)	BS : Solenoid Controlled Relief Valves	T : Threaded Connection	03	V : For High Venting Pressure Feature (Omit if not required)	2B3A	AC : A100, A120 A200, A240 DC : D12, D24 D48 AC→DC Rectified : R100, R200	None: Terminal Box Type N : With Plug-in Connector (DIN) (Option)	48
			06		2B3B			48
			10		2B2B			48
		G : Sub-plate Mounting	03		2B2			48
			06		3C2			48
			10		3C3			48

★1. Models with vent restrictor are applicable only for the vent type 2B3A and 2B3B. For details, see page C-19.
★2. Use high venting pressure types to reduce changeover time from unloading to onloading.
★3. For the details of the vent types, see the following page.
★4. The coil codes are the same as for solenoid operated directional valve DSG-01. See the Solenoid Ratings on page C-52.

Low Noise Type Solenoid Controlled Relief Valves

Low Noise Type Solenoid Controlled Relief Valves are also available. For details, please contact us.

Request

The coil type numbers in the shaded column are handled as optional extras.
In case these coils are required to be chosen, please confirm the time of delivery with us before ordering.

Vent Types

Vent Type	Graphic Symbols	Solenoid Operated Directional Valve Model Numbers	Operation		
			SOL"a"	SOL"b"	Vent Connecting
2B3A	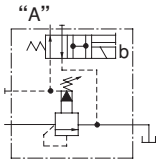	DSG-01-2B3A	——	OFF	Connected to port "A".
				ON	Connected to tank (no-load)
2B3B	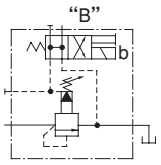	DSG-01-2B3B	——	OFF	Connected to tank (no-load)
				ON	Connected to port "B".
2B2B	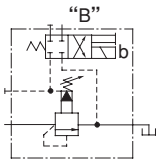	DSG-01-2B2B	——	OFF	Closed state (relief valve setting pressure)
				ON	Connected to port "B".
2B2	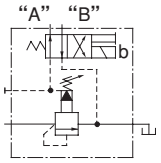	DSG-01-2B2	——	OFF	Connected to port "A".
				ON	Connected to port "B".
3C2	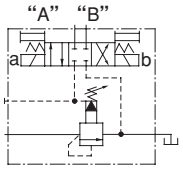	DSG-01-3C2	OFF	OFF	Closed state (relief valve setting pressure)
			ON	OFF	Connected to port "A".
			OFF	ON	Connected to port "B".
3C3	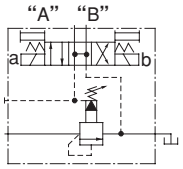	DSG-01-3C3	OFF	OFF	Connected to tank (no-load)
			ON	OFF	Connected to port "A".
			OFF	ON	Connected to port "B".

Accessories

Mounting Bolts

Valve Model Numbers	Socket Head Cap Screw
BSG-03	M12□70L…2 Pcs. M12□95L…2 Pcs.
BSG-06	M16□60L…2 Pcs. M16□80L…2 Pcs.
BSG-10	M20□70L…2 Pcs. M20□90L…2 Pcs.

Type of Electrical Conduit Connection

Type of electrical conduit connection is same as solenoid operated directional valve DSG-01. For details, see page C-51.

Sub-plates

Valve Model Numbers	Sub-plate Model Numbers	Thread Size Rc	Approx. Mass kg
BSG-03	BGM-03-20	3/8	2.4
	BGM-03X-20	1/2	3.1
BSG-06	BGM-06-20	3/4	4.7
	BGM-06X-20	1	5.7
BSG-10	BGM-10-20	1 1/4	8.4
	BGM-10X-20	1 1/2	10.3

- Sub-plates are available. Specify the sub-plate model number from the table above. When sub-plates are not used, the mounting surface should have a good machined finish. (1.6)
- The sub-plates are those for pilot operated relief valves. For dimensions, see page C-9.

Option

Models with Vent Restrictor

The type with a vent restrictor has a vent restrictor in vent types 2B3A and 2B3B added between a relief valve and a solenoid operated directional valve. If prevents shock to the main circuit by gradually lowering the venting pressure in the shift from the set pressure to unloading.
Unloading pressure are the same as without a vent restrictor.

A-BS∗-∗-2B3A

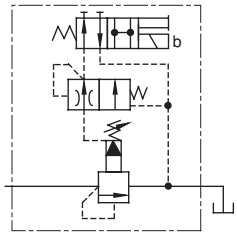

A-BS∗-∗-2B3B

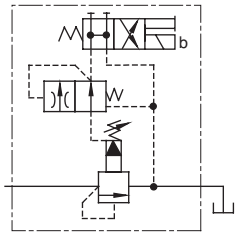

Instructions

- If a remote control relief valve is used in the vent circuit, see page C-3. In addition, if the internal volume of the vent line is too large, chattering is likely to occur. Thus, as far as possible reduce the inside diameter and the length of the pipe.
- To adjust the pressure, loosen the lock nut and turn the handle slowly clockwise for higher pressures or anti-clockwise for lower pressures. Pressure change of one handle revolution is about 5 MPa. After adjustments, do not forget to tighten the lock nut.
- Piping of the tank line should not be connected to any tank line of the other valves, but connected directly to the reservoir.
- With a small flow, the setting pressure may be unstable. Use with the minimum flow rate as the below chart.

Valve Size	Min. Flow
03	8 L/min
06	
10	15 L/min

BST-03, 06, 10

★1. Pressure is limited by collars fitted. If a working pressure cannot be attained, remove some collars. One collar is equivalent to 10 MPa.
★2. There are two threaded connection pressure ports. They can be connected each other in-line; one as inlet and the other as an outlet or the valve can be used by plugging one of the pressure ports.

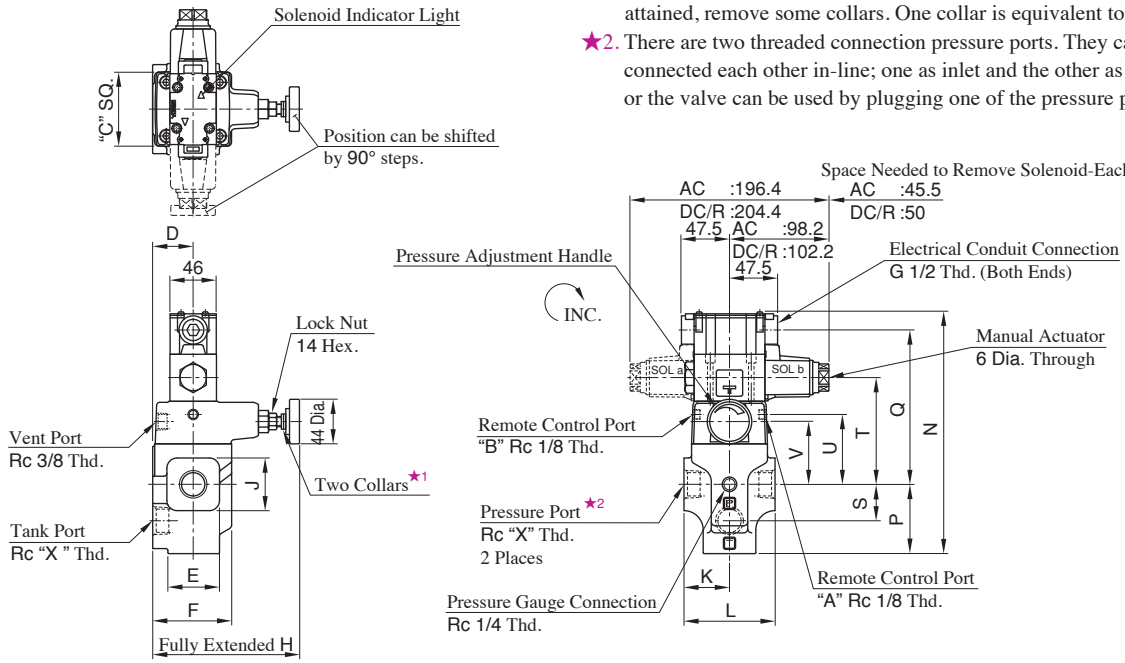

Model Numbers	C	D	E	F	H	J	K	L	N	P	Q	S	T	U	V	X
BST-03	75	40	52	78	145	52	45	90	239.3	68.5	152.5	36	105.5	69	62	3/8
BST-06																3/4
BST-10	85	50	80	96	151	80	60	120	271.8	89	164.5	49	117.5	81	74	1 1/4

Models with Vent Restrictor (Option)
A-BST-03, 06, 10

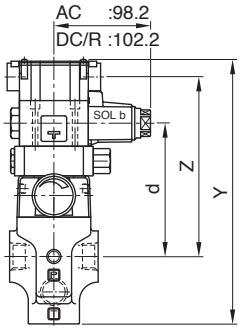

Model Numbers	Y	Z	d
A-BST-03	269.3	182.5	135.5
A-BST-06			
A-BST-10	301.8	194.5	147.5

For other dimensions, see the above figure.

Models with Plug-in Connector (Option)
BST-06-∗-∗-∗-N (03 / 06 / 10)

Name	Coil Type	e	f	h
AC Solenoid	A∗	53	65	39
DC Solenoid	D∗	64	76	39
R (AC→DC) Solenoid	R∗	57.2	79	53

For other dimensions, see the above figure.

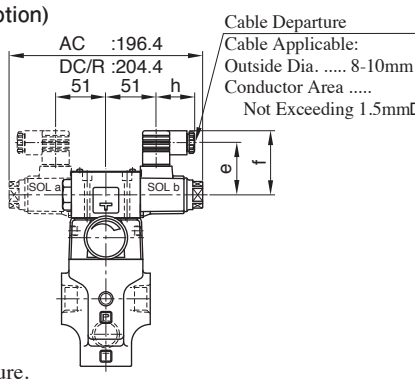

BSG-03, 06, 10

Mounting Surface
BSG-03 : ISO 6264-06-09-1-97
BSG-06 : ISO 6264-08-13-1-97
BSG-10 : ISO 6264-10-17-1-97

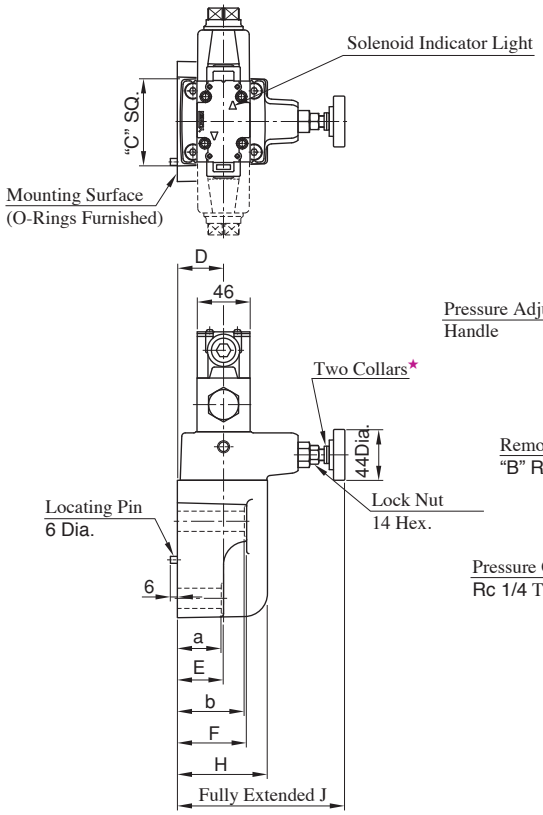

★ Pressure is limited by collars fitted. If a working pressure cannot be attained, remove some collars. One collar is equivalent to 10 MPa.

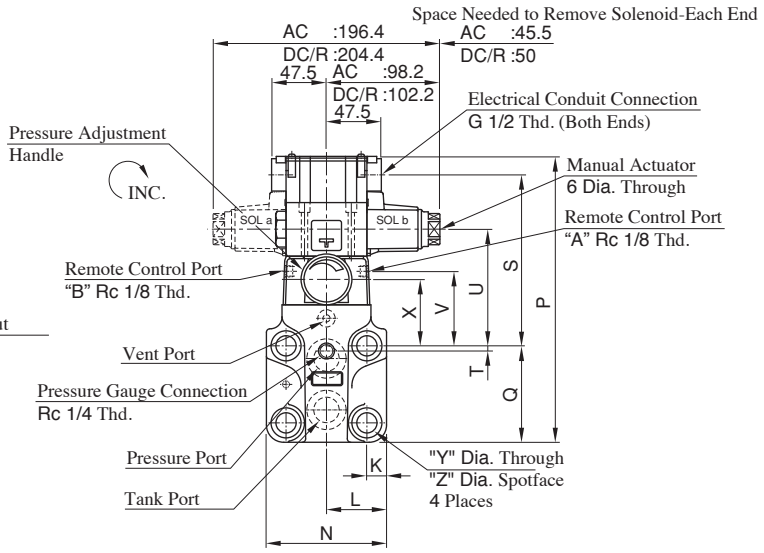

Model Numbers	C	D	E	F	H	J	K	L	N	P	Q	S	T	U	V	X	Y	Z	a	b
BSG-03	75	40	57	78	78	145	14.1	41	82	225.8	77	130.5	22	83.5	47	40	13.5	21	55	77
BSG-06	75	40	40	60	78	145	17	52	104	249.8	83.5	148	4.5	101	64.5	57.5	17.5	26	38	58
BSG-10	85	45	47	67	84	146	20.7	62	124	283.8	110	155.5	6	108.5	72	65	21.5	32	45	65

Note :For dimensions of the valve mounting surface, see the dimensional drawing (page C-9) of the sub-plate used together.

Models with Vent Restrictor (Option)
A-BSG-03, 06, 10

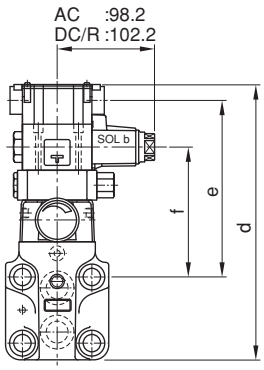

Model Numbers	d	e	f
A-BSG-03	255.8	160.5	113.5
A-BSG-06	279.8	178	131
A-BSG-10	313.8	185.5	138.5

For other dimensions, see the above figure.

Models with Plug-in Connector (Option)
BSG-06-∗-∗-∗-N (03 / 06 / 10)

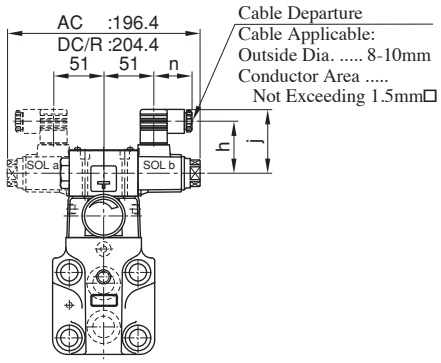

Name	Coil Type	h	j	n
AC Solenoid	A∗	53	65	39
DC Solenoid	D∗	64	76	39
R (AC→DC) Solenoid	R∗	57.2	79	53

For other dimensions, see the above figure.

List of Seals

BST / BSG -03, 06, 10

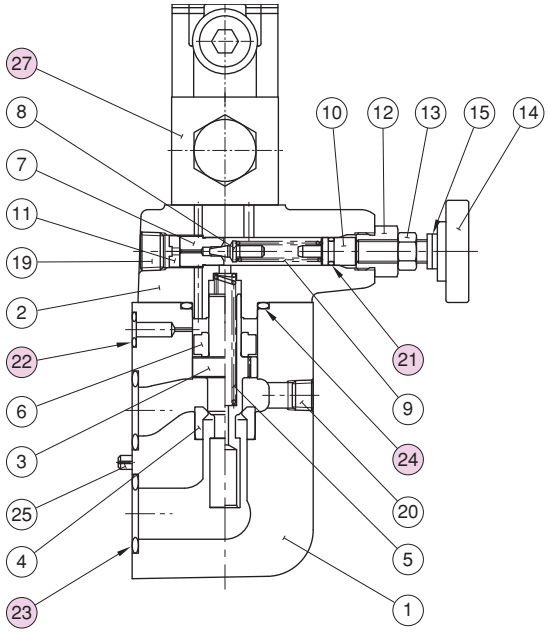

BST-03, 06, 10

Item	Name of Parts	Part Numbers			Qty.
		BST-03	BST-06	BST-10	
21	O-Ring	OR NBR-70-1 P9-N	OR NBR-70-1 P9-N	OR NBR-70-1 P9-N	1
24	O-Ring	OR NBR-90 P32-N	OR NBR-90 P32-N	OR NBR-90 P32-N	1

BSG-03, 06, 10

Item	Name of Parts	Part Numbers			Qty.
		BSG-03	BSG-06	BSG-10	
21	O-Ring	OR NBR-70-1 P9-N	OR NBR-70-1 P9-N	OR NBR-70-1 P9-N	1
22	O-Ring	OR NBR-90 P9-N	OR NBR-90 P11-N	OR NBR-90 P9-N	1
23	O-Ring	OR NBR-90 P18-N	OR NBR-90 P28-N	OR NBR-90 P32-N	2
24	O-Ring	OR NBR-90 P32-N	OR NBR-90 P32-N	OR NBR-90 P42-N	1

Note: The Pilot Valve for item ㉑, see "DSG-01 Series Solenoid Operated Directional Valves" of the catalogue "E: Directional Controls".

A- BST / BSG -03, 06, 10
(Models with Vent Restrictor)

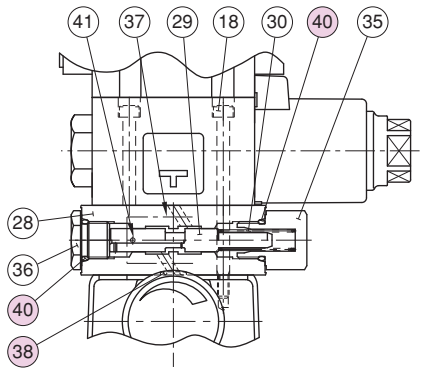

A- BST / BSG -03, 06, 10

Item	Name of Parts	Part Numbers	Qty.
38	O-Ring	OR NBR-90 P8-N	2
40	O-Ring	OR NBR-90 P14-N	2

Solenoid Controlled Relief Valves (High Pressure Type)

The solenoid controlled relief valve is a combination of a pilot operated relief valve and a solenoid operated directional valve. It is used for no-load pump operation by using electric signals or, together with a remote control relief valve, for two or three pressure control of the hydraulic system. This valve is able to adjust pressure up to maximum 35 MPa.

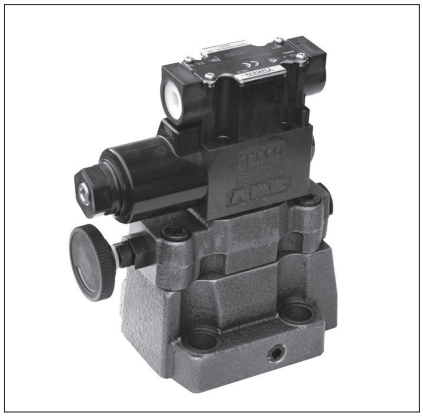

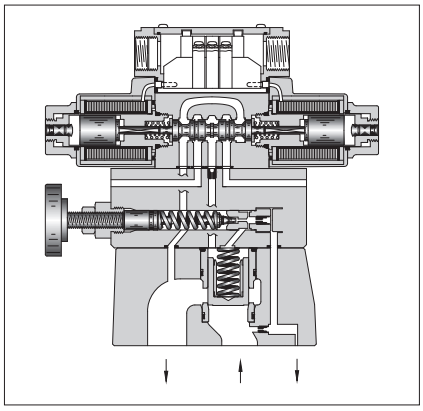

Specifications

Model Numbers	Max. Operating Pres. MPa	Pres. Adj. Range MPa	Max. Flow L/min
B3SG–03–∗–∗–∗–∗–10	35	★ - 35	250
B3SG–06–∗–∗–∗–∗–10			500

★ For minimum adjustment pressures and other characteristics, see page C-15.

Approx. Mass

Model Numbers	Double Sol.	Single Sol.	With Vent Restrictor
B3SG–03	6.0 kg	5.5 kg	6.6 kg
B3SG–06	7.0 kg	6.5 kg	7.6 kg

Model Number Designation

A–	B3S	G	–03	– V	–2B3A	–A100	– N	–10
With Vent★1 Restrictor	Series Number	Type of Mounting	Valve Size	High Venting★2 Pres. Feature	Vent Type★3	Coil Type★4	Type of Electrical Con.	Design Number
A : With Vent Restrictor (Option) (Omit if not required)	B3S : Solenoid Controlled Relief Valves (High Pressure Type)	G : Sub-plate Mounting	03	V : For High Venting Pressure Feature (Omit if not required)	2B3A 2B3B 2B2B 2B2 3C2 3C3	AC : A100, A120 A200, A240 DC : D12, D24 D48 AC→DC Rectified : R100, R200	None: Terminal Box Type N : With Plug-in Connector (DIN) (Option)	10
			06					10

★1. Models with vent restrictor are applicable only for the vent type 2B3A and 2B3B. For details, see page C-23 "Option".
★2. Use high venting pressure types to reduce changeover time from unloading to onloading.
★3. The details of the vent types are the same as for solenoid controlled relief valves BST/BSG. See page C-18 "Vent Types".
★4. The coil codes are the same as for solenoid operated directional valve DSG-01. See the Solenoid Ratings on page C-52.

Request

The coil type numbers in the shaded column are handled as optional extras.
In case these coils are required to be chosen, please confirm the time of delivery with us before ordering.

Accessories

Mounting Bolts

Valve Model Numbers	Socket Head Cap Screw
B3SG-03	M12□40L …… 4 Pcs.
B3SG-06	M16□50L …… 4 Pcs.

Type of Electrical Conduit Connection

Electrical conduit connection is same as solenoid operated directional valve DSG-01. For details, see page C-51.

Sub-plates

Valve Model Numbers	Sub-plate Model Numbers	Thread Size Rc	Approx. Mass kg
B3SG-03	BGM-03-20	3/8	2.4
	BGM-03X-20	1/2	3.1
B3SG-06	BGM-06-20	3/4	4.7
	BGM-06X-20	1	5.7

- Sub-plates are available. Specify the sub-plate model number from the table above. When sub-plates are not used, the mounting surface should have a good machined finish. (1.6/▽)
- The sub-plates are those for pilot operated relief valves. For dimensions, see page C-9.

Option

Models with Vent Restrictor

The type with a vent restrictor has a vent restrictor in vent types 2B3A and 2B3B added between a relief valve and a solenoid operated directional valve. If prevents shock to the main circuit by gradually lowering the venting pressure in the shift from the set pressure to unloading.
Unloading pressure are the same as without a vent restrictor.

A-B3SG-＊-2B3A

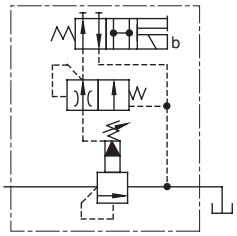

A-B3SG-＊-2B3B

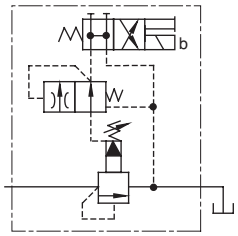

Instructions

- When control in the vent circuit, if the internal volume of the vent line is too large, chattering is likely to occur. Thus, as far as possible reduce the inside diameter and the length of the pipe.
- To adjust the pressure, loosen the lock nut and turn the handle slowly clockwise for higher pressures or anti-clockwise for lower pressures. Pressure change of one handle revolution is about 7 MPa. After adjustments, do not forget to tighten the lock nut.
- Piping of the tank line should not be connected to any tank line of the other valves, but connected directly to the reservoir.
- With a small flow, the setting pressure may be unstable. Use with the minimum flow rate as the below chart.

Valve Size	Min. Flow
03	8 L/min
06	

B3SG-03, 06

Mounting Surface
B3SG-03 : ISO 6264-06-09-1-97
B3SG-06 : ISO 6264-08-13-1-97

★ Pressure is limited by collars fitted. If a working pressure cannot be attained, remove some collars. One collar is equivalent to 14 MPa.

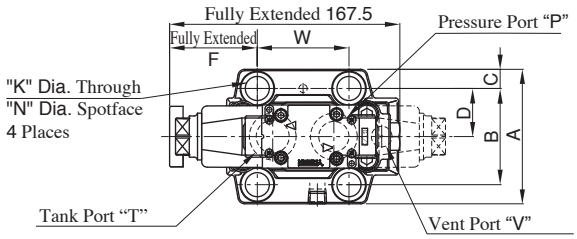

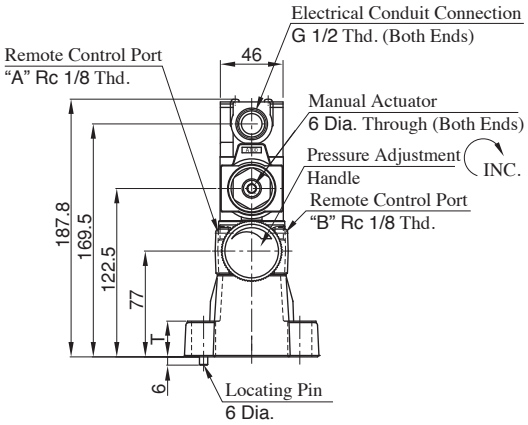

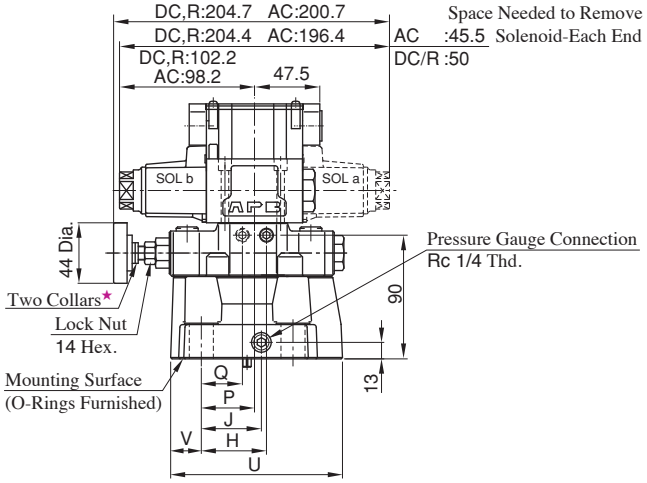

Model Numbers	A	B	C	D	E	F	H	J	K	N	P	Q	T	U	V	W
B3SG–03	76	53.8	11.1	26.9	53.8	74.6	36.6	29.3	13.5	21	27.9	19.1	21.5	111	31.2	53.8
B3SG–06	100	70	15	35	66.7	63.8	47.4	43.7	17.5	27	38.7	29.9	26	125	22.3	66.7

Note: For dimensions of the valve mounting surface, see the dimensional drawing (page C-9) of the sub-plate used together.

Models with Vent Restrictor (Option) A-B3SG-03, 06

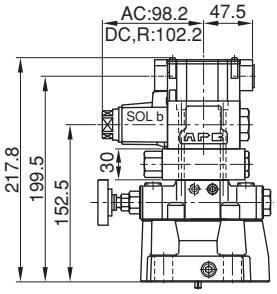

Models with Plug-in Connector (Option) B3SG-03/06-＊-＊-＊-N

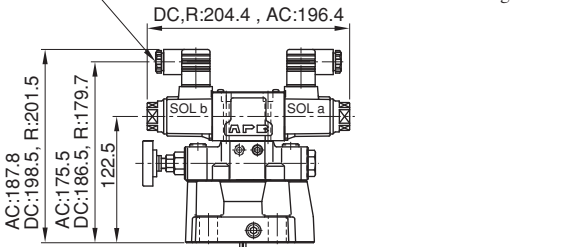

List of Seals

B3SG-03, 06

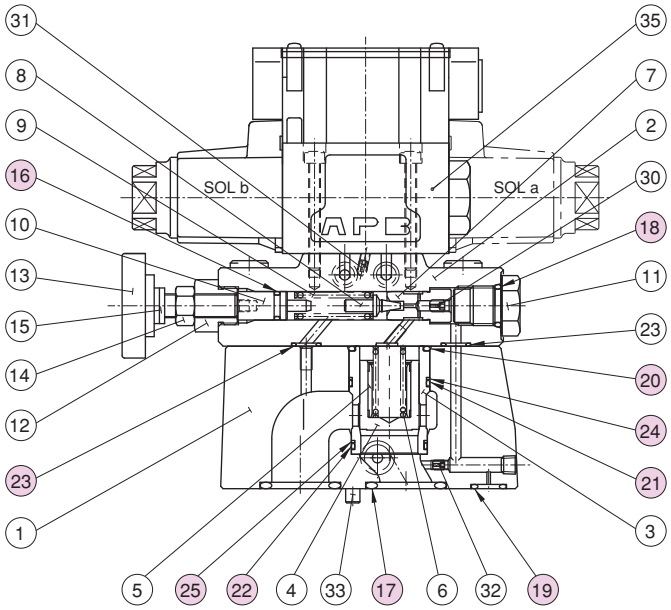

B3SG-03, 06

Item	Name of Parts	Part Numbers		Qty.
		B3SG–03	B3SG–06	
16	O-Ring	OR NBR-70-1 P9-N	OR NBR-70-1 P9-N	1
17	O-Ring	OR NBR-90 P18-N	OR NBR-90 P28-N	2
18	O-Ring	OR NBR-90 P14-N	OR NBR-90 P14-N	1
19	O-Ring	OR NBR-90 P9-N	OR NBR-90 P11-N	1
20	O-Ring	AS568-123 (NBR-90)	AS568-123 (NBR-90)	1
21	O-Ring	AS568-025 (NBR-90)	AS568-025 (NBR-90)	1
22	O-Ring	AS568-024 (NBR-90)	AS568-024 (NBR-90)	1
23	O-Ring	AS568-012 (NBR-90)	AS568-012 (NBR-90)	2
24	Back-up Ring	SO-BRB-34	SO-BRB-34	1
25	Back-up Ring	SO-BRB-32	SO-BRB-32	1

Note: The Pilot Valve for item ㉟, see "Solenoid Operated Directional Valves, DSG-01 Series" of the catalogue "E: Directional Controls".

A-B3SG-03, 06 (Models with Vent Restrictor)

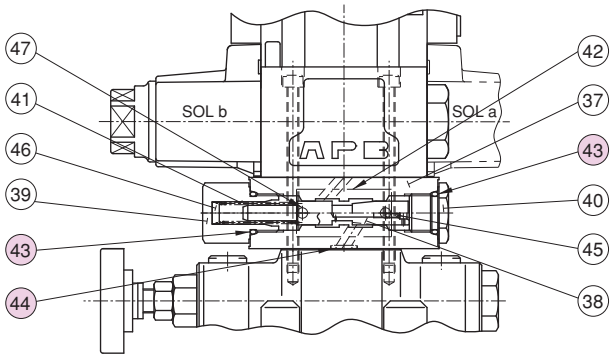

A-B3SG-03, 06

Item	Name of Parts	Part Numbers	Qty.
43	O-Ring	OR NBR-90 P14-N	2
44	O-Ring	OR NBR-90 P8-N	2

H/HC Type Pressure Control Valves

These valves are hydraulically damped, direct operated, pressure control valves which can be actuated by internal or external pilot pressure.

H Type Pressure Control Valves

There are various types of valve including sequence, unloading and low pressure relief valves.

HC Type Pressure Control Valves

They are available with integral check valves for use when free reverse flow from secondary port to the primary port is desired. There are various types of valve including sequence with check and counterbalance valves.

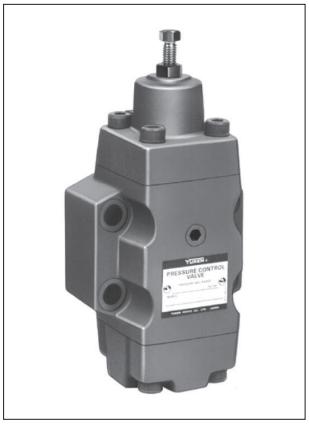

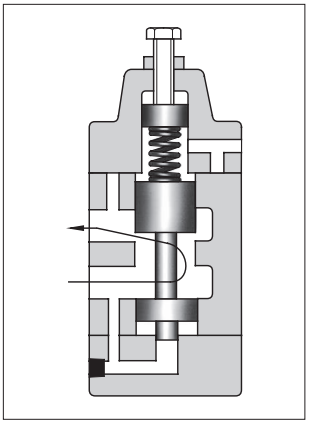

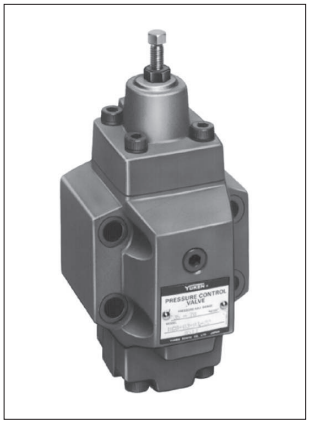

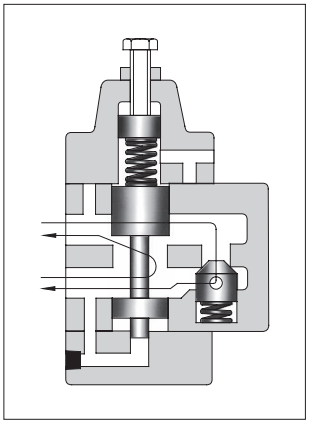

Specifications

Series	Model Numbers		Max. Operating Pres. MPa	Max. Flow L/min	Approx. Mass kg	
	Threaded Connection	Sub-plate Mounting			H/HC Type	HG/HCG Type
H Type Pressure Control Valves	HT-03-＊＊-＊-22	HG-03-＊＊-＊-22	21	50	3.7	4.0
	HT-06-＊＊-＊-22	HG-06-＊＊-＊-22		125	6.2	6.1
	HT-10-＊＊-＊-22	HG-10-＊＊-＊-22		250	12.0	11.0
HC Type Pressure Control Valves	HCT-03-＊＊-＊-22	HCG-03-＊＊-＊-22	21	50	4.1	4.8
	HCT-06-＊＊-＊-22	HCG-06-＊＊-＊-22		125	7.1	7.4
	HCT-10-＊＊-＊-22	HCG-10-＊＊-＊-22		250	13.8	13.8

● For check valve pressure drops of HC type, see free flow pressure drop characteristics.

Yuken can offer flanged connection valves described below.
For details, contact us and request information.

Model Numbers	Max. Operating Pres. MPa	Max. Flow L/min
HF/HCF–10–＊＊–＊–22	21	250
HF/HCF–16–＊＊–＊–20		500

Model Number Designation

H	T	−03	−C	3	−P	−22
Series Number	Type of Mounting	Valve Size	Pres. Adj. Range MPa	Valve Type★1	With Auxiliary Pilot Pressure★2	Design Number
H : H Type Pressure Control Valves	T : Threaded Connection	03	L : 0.25 - 0.45 M : 0.45 - 0.9 N : 0.9 - 1.8 A : 1.8 - 3.5 B : 3.5 - 7.0 C : 7.0 - 14	1 2 3 4	P : With Auxiliary Pilot Pressure	22
		06				22
		10				22
	G : Sub-plate Mounting	03				22
		06				22
		10				22
HC : HC Type Pressure Control Valves	T : Threaded Connection	03				22
		06				22
		10				22
	G : Sub-plate Mounting	03				22
		06				22
		10				22

★1. For the details of valve types, see the following page.
★2. Models with auxiliary pilots are used where valves must be operated under a lower external pilot pressure than the adjusted pressure (types N, A, and B: about 1/8 of adjusted pressure; type C: about 1/16).

For combinations, see the chart below.

Combination List of Pres. Adj. Range and "P" Auxiliary Pilots.

Valve Type / Pres. Adj. Range	Type 1				Type 2		Type 3		Type 4	
	HT, HG		HCT, HCG							
	Without P	With P	Without P	With P	Without P	With P	Without P	With P	Without P	With P
L	○	—	○	—	○	—	○	—	○	—
M	○	—	○	—	○	—	○	—	○	—
N	—		○	○	○	○	○	○	○	○
A	—		○	○	○	○	○	○	○	○
B	—		○	○	○	○	○	○	○	○
C	—		○	○	○	○	○	○	○	○

Instructions

- To adjust the pressure, loosen the lock nut and turn the pressure adjustment screw slowly clockwise to increase pressures or anti-clockwise to decrease pressures. After adjustments, do not forget to tighten the lock nut.
- Connect the secondary side pressure ports of types 1 and 4 (internal drain) and the drain ports of types 2 and 3 (external drain) directly to the reservoir with a back pressure close to the atmospheric pressure.

Accessories

Mounting Bolts

Valve Size / Valve Model Numbers	03	06	10
HG	M10□50L : 4 Pcs.		M10□50L : 6 Pcs.
HCG	M10□70L : 4 Pcs.	M10□80L : 4 Pcs.	M10□100L : 6 Pcs.

Sub-plates

Valve Model Numbers	Sub-plate Model Numbers	Thread Size Rc	Approx. Mass kg
HG/HCG-03-＊＊-22	HGM-03-20	3/8	1.6
	HGM-03X-20	1/2	
HG/HCG-03-＊＊-P-22	HGM-03-P-20	3/8	2.0
	HGM-03X-P-20	1/2	
HG/HCG-06-＊＊-22	HGM-06-20	3/4	2.4
	HGM-06X-20	1	3.0
HG/HCG-06-＊＊-P-22	HGM-06-P-20	3/4	2.4
	HGM-06X-P-20	1	3.0
HG/HCG-10-＊＊-22	HGM-10-20	1 1/4	4.8
	HGM-10X-20	1 1/2	5.7
HG/HCG-10-＊＊-P-22	HGM-10-P-20	1 1/4	4.8
	HGM-10X-P-20	1 1/2	5.7

- Sub-plates are available. Specify the sub-plate model number from the table above. When sub-plates are not used, the mounting surface should have a good machined finish. (1.6)
- The sub-plates are those for H Type Pressure Control Valves. For dimensions, see page C-32.

Valve Types

H Type

Valve Type	Type 1: Low Pressure Relief Valve	Type 2: Sequence Valve	Type 3: Sequence Valve	Type 4: Unloading Valve
Pilot-Drain Type	Internal Pilot-Internal Drain	Internal Pilot-External Drain	External Pilot-External Drain	External Pilot-Internal Drain
Operations	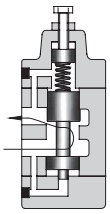	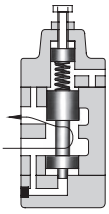	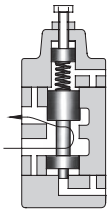	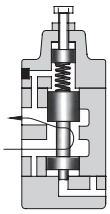
Graphic Symbols		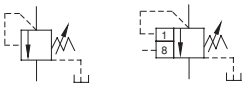 With auxiliary pilot port	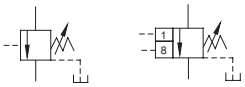 With auxiliary pilot port	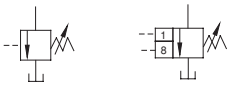 With auxiliary pilot port
Descriptions	Can be used as low pressure relief valve, but be careful to occurrence of surge pressure.	Used to control the operational sequence of two or more actuators. If primary pressure exceeds the pressure setting, effective fluid is delivered to the secondary side.	Used for the same purpose as for the type 2. Operated by external pilot pressure irrespective of primary pressure.	Used as unloading valve. If external pilot pressure exceeds the pressure setting, the pump is turned no-load by releasing all fluid to the tank.

HC Type

Valve Type	Type 1: Counterbalance Valve	Type 2: Sequence and Check Valve	Type 3: Sequence and Check Valve	Type 4: Counterbalance Valve
Pilot-Drain Type	Internal Pilot-Internal Drain	Internal Pilot-External Drain	External Pilot-External Drain	External Pilot-Internal Drain
Operations	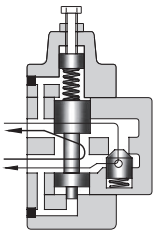	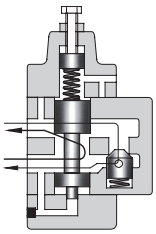	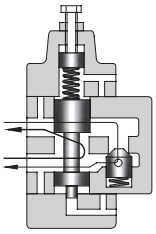	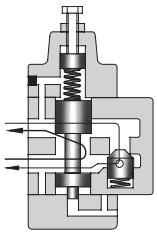
Graphic Symbols	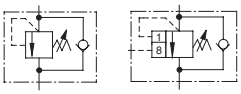 With auxiliary pilot port	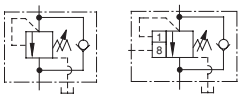 With auxiliary pilot port	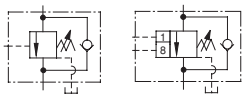 With auxiliary pilot port	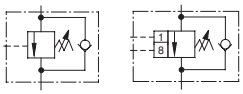 With auxiliary pilot port
Descriptions	Used to prevent gravitational falls by generating a pressure on the actuator return side. If primary pressure exceeds the pressure setting, fluid is released to keep the pressure constant. Reversed flow is free by a check valve.	Used to control the operating sequence of two or more actuators. If primary pressure exceeds the pressure setting, effective fluid is delivered to the secondary side. Reversed flow is free by a check valve.	Used for the same purpose as for type 2. Operated by external pilot pressure irrespective of primary pressure. Reversed flow is free by a check valve.	Used for the same purpose as for type 1. Operated by external pilot pressure irrespective of primary pressure. Reversed flow is free by a check valve.

HT-03, 06, 10

Type 3: Sequence Valve

(External Pilot - External Drain)

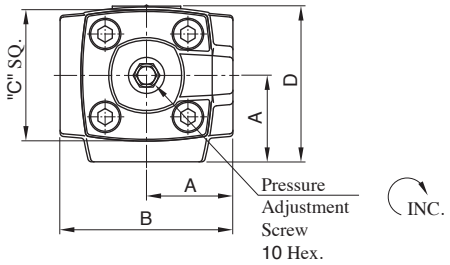

★ There are two threaded connection primary pressure ports. They can be connected each other in-line; one as inlet and the other as an outlet or the valve can be used by plugging one of the pressure ports.

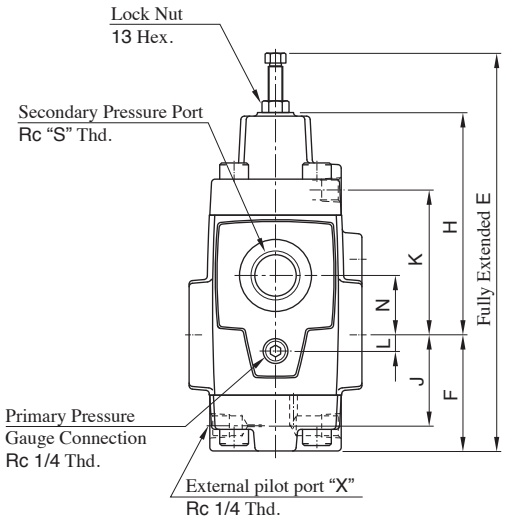

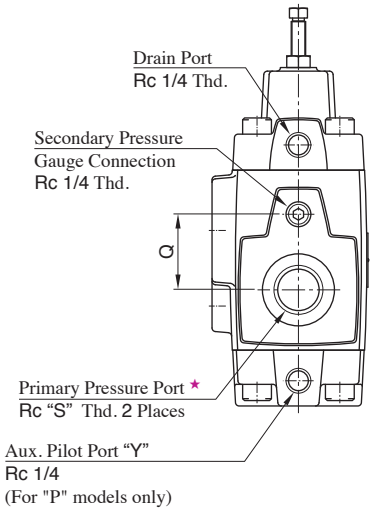

Model Numbers	A	B	C	D	E	F	H	J	K	L	N	Q	S
HT–03	41	82	60	74	191	57	106	43	70	0	28	28	3/8
HT–06	48	96	73	87	221	64.5	123.5	50.5	80.5	9	33	42	3/4
HT–10	66	132	86	112	272	84	149	66	98	12	40	52	1 1/4

Type 1: Low Pressure Relief Valve

(Internal Pilot - Internal Drain)

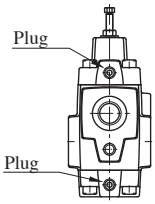

Type 2: Sequence Valve

(Internal Pilot - External Drain)

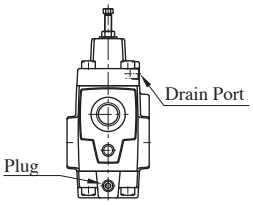

Type 4: Unloading Valve

(External Pilot - Internal Drain)

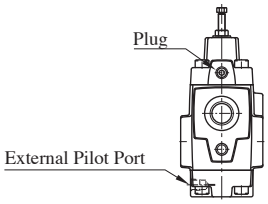

HG-03, 06

Mounting Surface
HG-03 : ISO 5781-06-07-0-00
HG-06 : ISO 5781-08-10-0-00

Type 3: Sequence Valve

(External Pilot - External Drain)

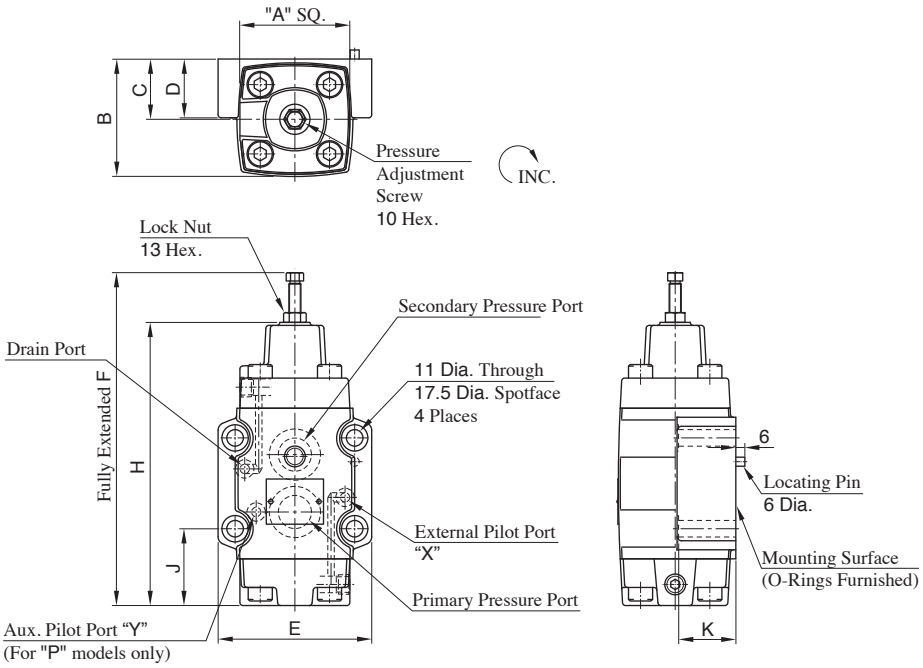

Model Numbers	A	B	C	D	E	F	H	J	K
HG-03	60	67	35	39	89	191	163	49.6	38
HG-06	73	79	40	39	102	221	188	51	38

Note: For dimensions of the valve mounting surface, see the dimensional drawing (page C-32) of the sub-plate used together.

Type 1: Low Pressure Relief Valve

(Internal Pilot - Internal Drain)

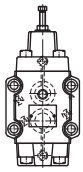

Type 2: Sequence Valve

(Internal Pilot - External Drain)

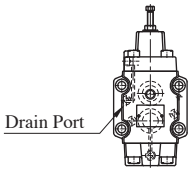

Type 4: Unloading Valve

(External Pilot - Internal Drain)

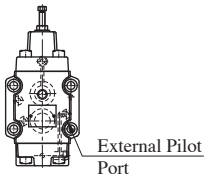

HG-10

Mounting Surface : ISO 5781-10-13-0-00

Type 3: Sequence Valve

(External Pilot - External Drain)

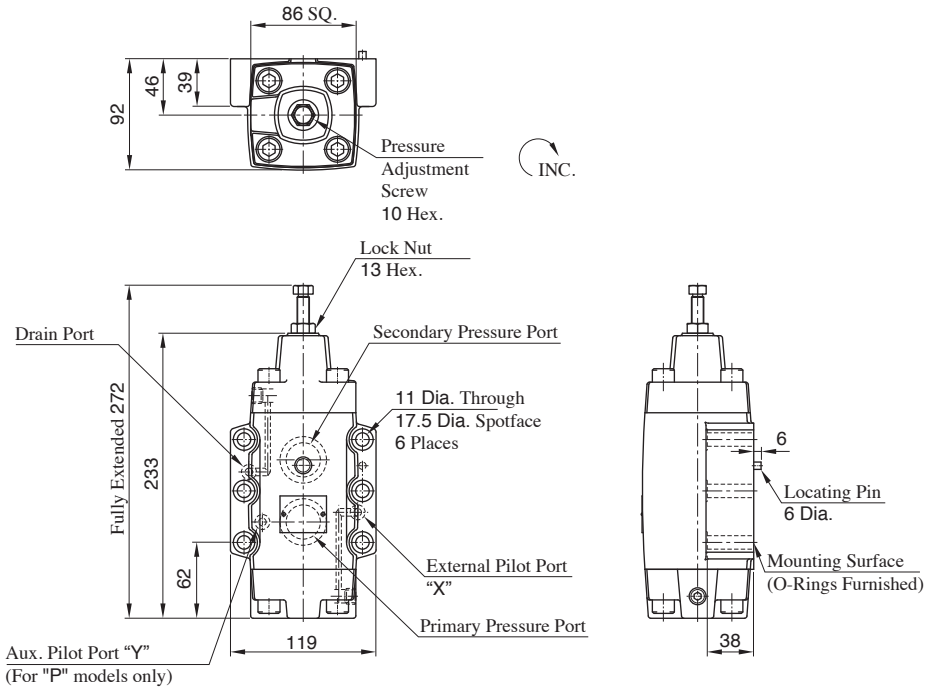

Note: For dimensions of the valve mounting surface, see the dimensional drawing (page C-32) of the sub-plate used together.

Type 1: Low Pressure Relief Valve

(Internal Pilot - Internal Drain)

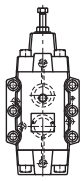

Type 2: Sequence Valve

(Internal Pilot - External Drain)

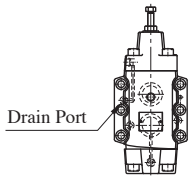

Type 4: Unloading Valve

(External Pilot - Internal Drain)

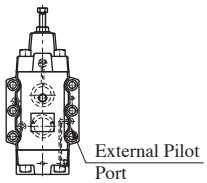

HCT-03, 06, 10

Type 3: Sequence and Check Valve

(External Pilot - External Drain)

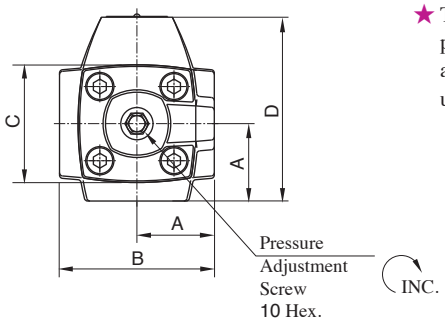

★ There are two threaded connection primary pressure ports. They can be connected each other in-line; one as inlet and the other as an outlet or the valve can be used by plugging one of the pressure ports.

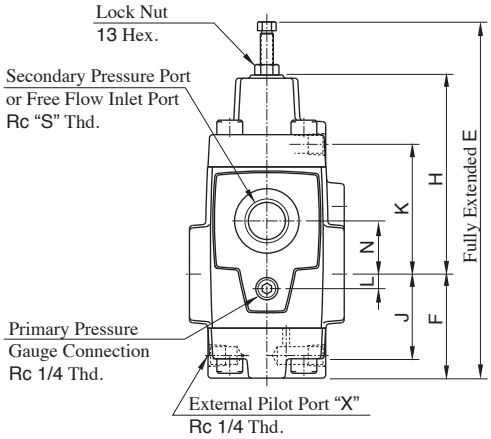

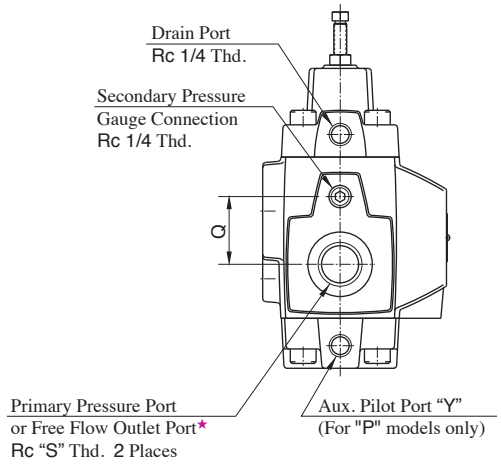

Model Numbers	A	B	C	D	E	F	H	J	K	L	N	Q	S
HCT–03	41	82	60	96	191	57	106	43	70	0	28	28	3/8
HCT–06	48	96	73	116	221	64.5	123.5	50.5	80.5	9	33	42	3/4
HCT–10	66	132	86	152	272	84	149	66	98	12	40	52	1 1/4

Type 1: Counterbalance Valve

(Internal Pilot - Internal Drain)

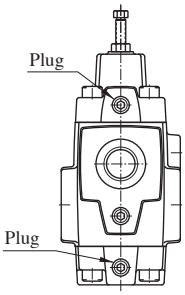

Type 2: Sequence and Check Valve

(Internal Pilot - External Drain)

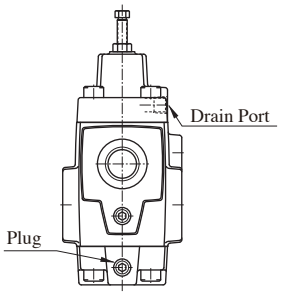

Type 4: Counterbalance Valve

(External Pilot - Internal Drain)

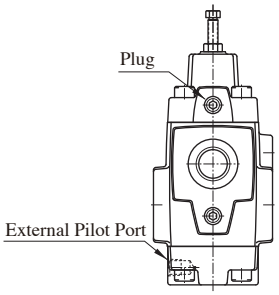

HCG-03, 06

Mounting Surface
HCG-03 : ISO 5781-06-07-0-00
HCG-06 : ISO 5781-08-10-0-00

Type 3: Sequence and Check Valve

(External Pilot - External Drain)

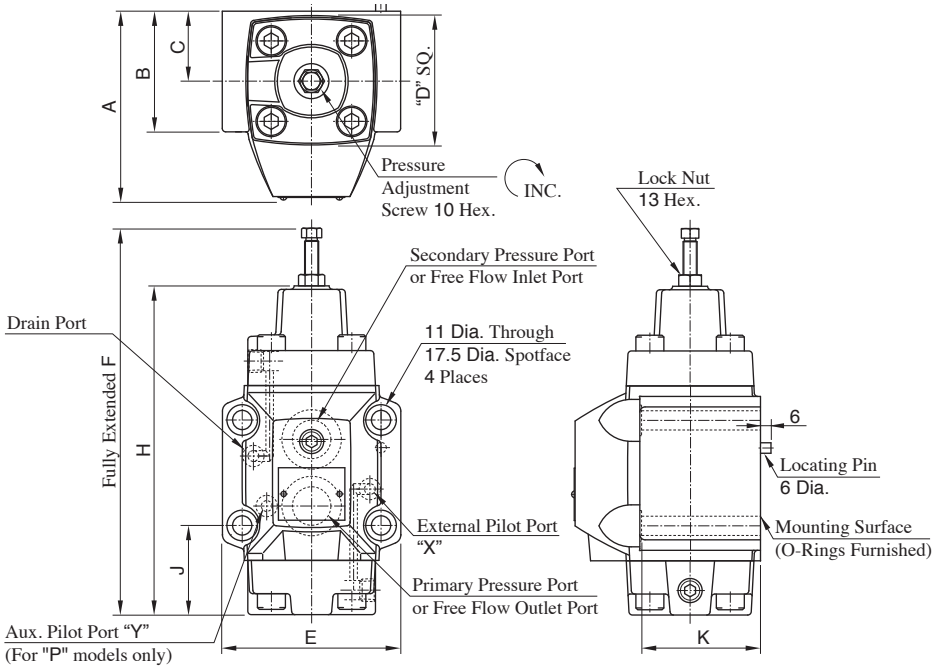

Model Numbers	A	B	C	D	E	F	H	J	K
HCG–03	90	59	35	60	89	191	163	49.6	58
HCG–06	108	69	40	73	102	221	188	51	68

Note: For dimensions of the valve mounting surface, see the dimensional drawing (page C-32) of the sub-plate used together.

Type 1: Counterbalance Valve

(Internal Pilot - Internal Drain)

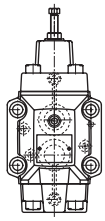

Type 2: Sequence and Check Valve

(Internal Pilot - External Drain)

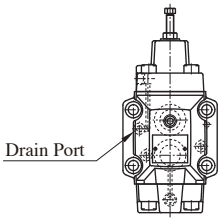

Type 4: Counterbalance Valve

(External Pilot - Internal Drain)

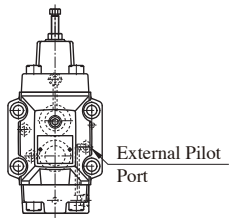

HCG-10

Mounting Surface : ISO 5781-10-13-0-00

Type 3: Sequence Valve

(External Pilot - External Drain)

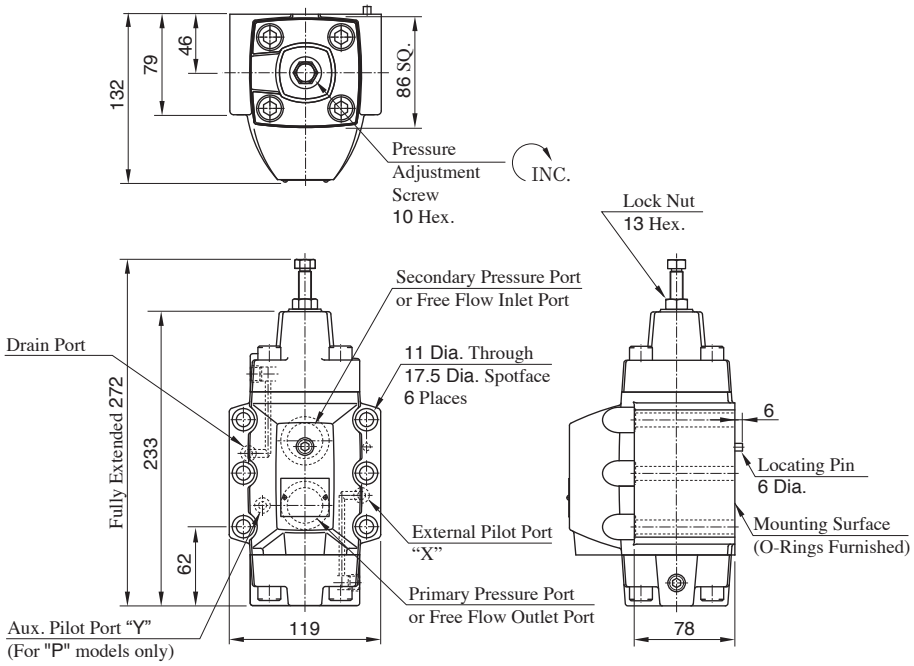

Note: For dimensions of the valve mounting surface, see the dimensional drawing (page C-32) of the sub-plate used together.

Type 1: Counterbalance Valve

(Internal Pilot - Internal Drain)

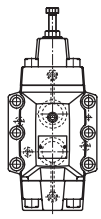

Type 2: Sequence and Check Valve

(Internal Pilot - External Drain)

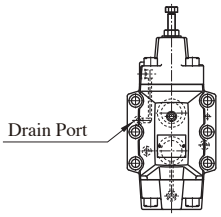

Type 4: Counterbalance Valve

(External Pilot - Internal Drain)

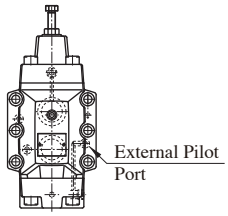

HGM-03, 03X

Sub-plate

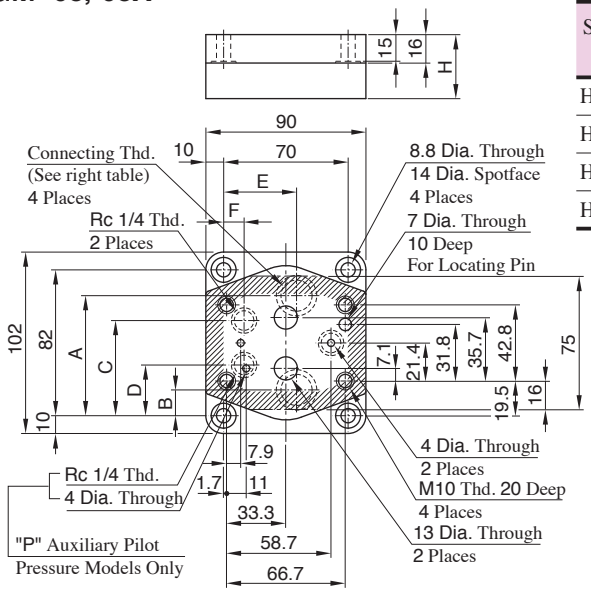

Sub-plate Model Numbers	Thread Size Rc	A	B	C	D	E	F	H
HGM–03–20	3/8	61	21	40.9	—	35	9.6	32
HGM–03X–20	1/2							
HGM–03–P–20	3/8	69.5	12.5	53.5	28.5	35	11.5	36
HGM–03X–P–20	1/2	67.5	14.5			41		

HGM-06, 06X

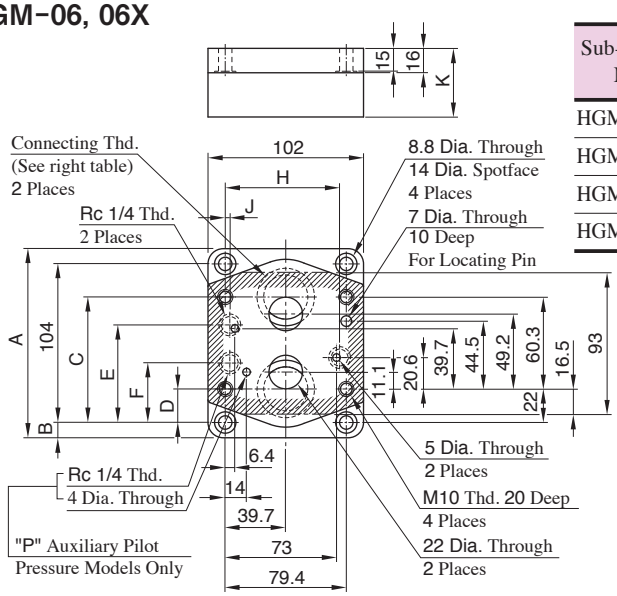

Sub-plate Model Numbers	Thread Size Rc	A	B	C	D	E	F	H	J	K
HGM–06–20	3/4	124	10	77	27	61.7	—	73	6.4	36
HGM–06X–20	1	136	16	82.3	22	61.7	—	75	6.4	45
HGM–06–P–20	3/4	124	10	77	27	64	39	73	3	36
HGM–06X–P–20	1	136	16	82.3	22	64	39	75	3	45

HGM-10, 10X

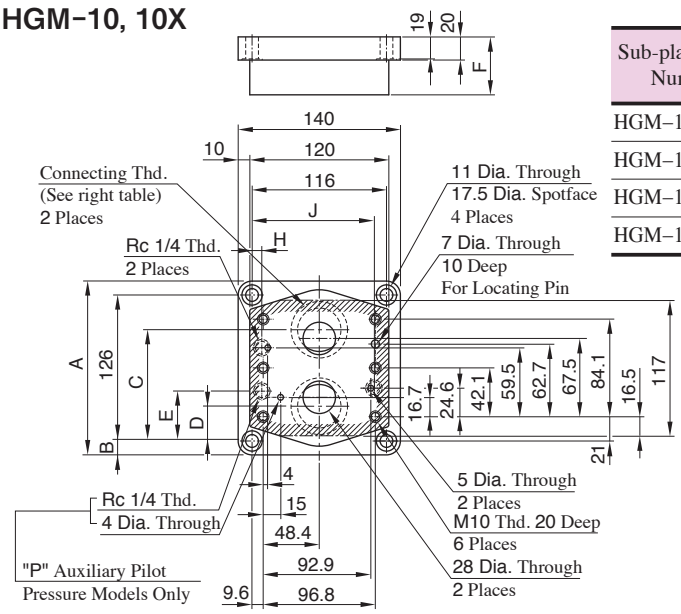

Sub-plate Model Numbers	Thread Size Rc	A	B	C	D	E	F	H	J
HGM–10–20	1 1/4	150	12	96	30	—	45	13.6	102.5
HGM–10X–20	1 1/2	177	25.5	104	22	—	50	13.6	102.5
HGM–10–P–20	1 1/4	150	12	96	30	43	45	9.6	102.5
HGM–10X–P–20	1 1/2	177	25.5	104	22	43	50	9.6	106

Instructions of HGM Type Sub-plates for Each Control Valves

HGM Type Sub-plates are used for H/HC Type Pressure Control Valves, and for Poppet Type Pressure Control Valves, Pressure Reducing Valves, Pressure Reducing and Check Valves, Pilot Operated Check Valves. See the table below about the connection between each ports and control valves, please use by these indications.

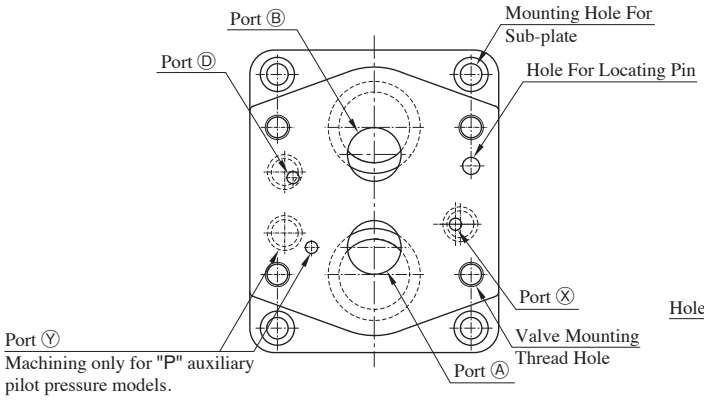

For HG・HCG・CP＊G

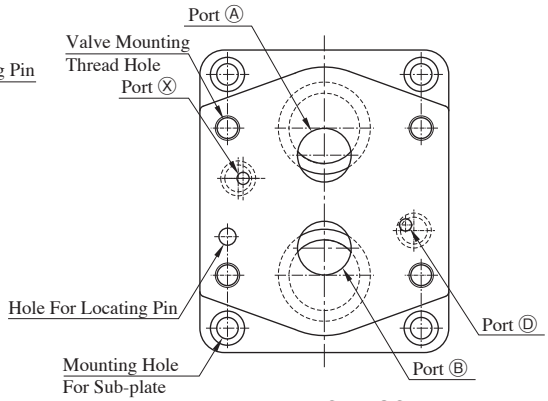

For RG・RCG

● Name of Ports and Instructions

Name of Valves	Valve Model Numbers	Name of Ports				
		Port Ⓐ	Port Ⓑ	Port Ⓓ	Port Ⓧ	Port Ⓨ
H Type Pressure Control Valves	HG 03 -06 10	Primary Pressure Port	Secondary Pressure Port	Drain Port	External Pilot Port	Auxiliary Pilot Port (For "P" models only)
HC Type Pressure Control Valves	HCG 03 -06 10	Primary Pressure Port or Free Flow Outlet Port	Secondary Pressure Port or Free Flow Inlet Port	Drain Port	External Pilot Port	Auxiliary Pilot Port (For "P" models only)
Pressure Reducing Valves	RG 03 -06 10	Primary Pressure Port	Secondary Pressure Port	Not Use	Drain Port	————
Pressure Reducing and Check Valves	RCG 03 -06 10	Primary Pressure Port or Free Flow Outlet Port	Secondary Pressure Port or Free Flow Inlet Port	Not Use	Drain Port	————
Pilot Operated Check Valves	CP＊G 03 -06 10	Free Flow Inlet Port or Reversed Free Flow Outlet Port	Free Flow Inlet Port or Reversed Free Flow Outlet Port	Drain Port ★	Pilot Port	————

★ If use internal drain type valves, have to plug on the drain port Ⓓ of sub-plates.

■ Pressure Drop for Reversed Free Flow

Hydraulic Fluid: Viscosity 35 mm²/s, Specific Gravity 0.850

HCT-03
HCG-03

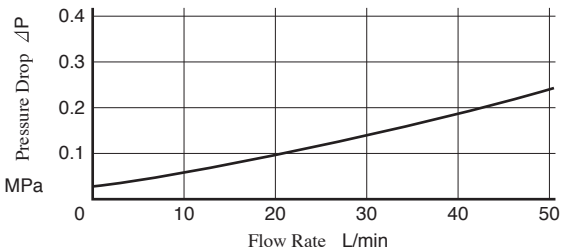

HCT-06
HCG-06

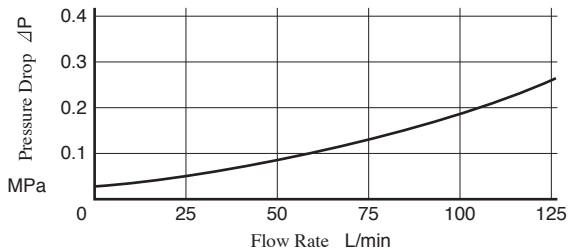

HCT-10
HCG-10

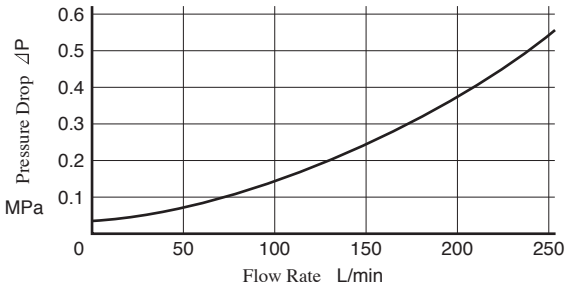

● For any other viscosity, multiply the factors in the table below.

Viscosity mm²/s	15	20	30	40	50	60	70	80	90	100
Factor	0.81	0.87	0.96	1.03	1.09	1.14	1.19	1.23	1.27	1.30

● For any other specific gravity (G'), the pressure drop (P') may be obtained from the formula below.

$\Delta P' = \Delta P\ (G'/0.850)$

Nominal Override Characteristics

Hydraulic Fluid:
Viscosity 35 mm□/s, Specific Gravity 0.850

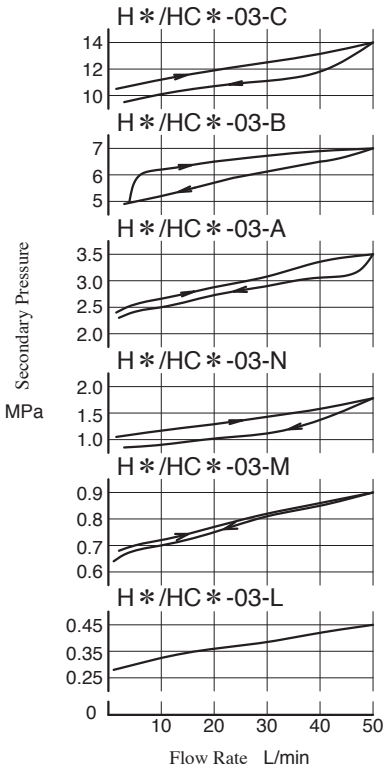

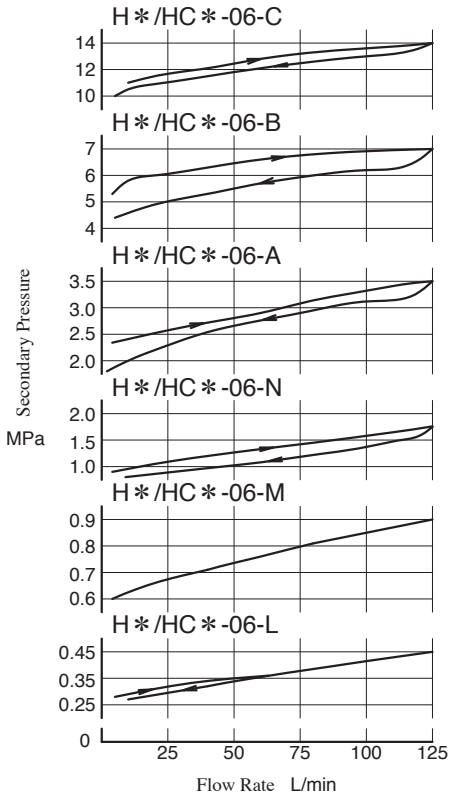

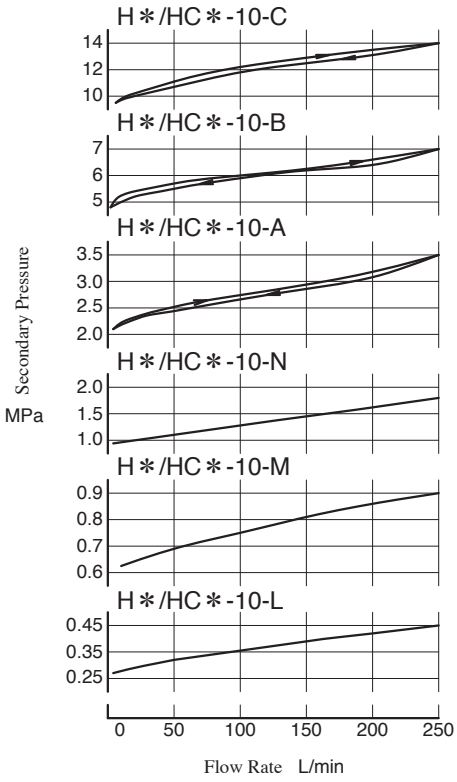

List of Seals

HT-03, 06, 10
HG-03, 06, 10

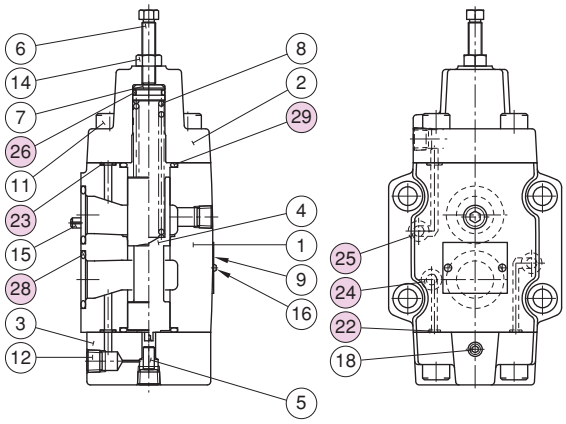

Item	Name of Parts	Part Numbers			Qty.	
		HT HG -03	HT HG -06	HT HG -10	HT-*	HG-*
22	O-Ring	OR NBR-90 P4-N	OR NBR-90 P4-N	OR NBR-90 P4-N	–	3★
23	O-Ring	OR NBR-90 P6-N	OR NBR-90 P6-N	OR NBR-90 P6-N	4	4
24	O-Ring	OR NBR-90 P9-N	OR NBR-90 P9-N	OR NBR-90 P9-N	–	1★
25	O-Ring	OR NBR-90 P9-N	OR NBR-90 P9-N	OR NBR-90 P9-N	–	2
26	O-Ring	OR NBR-70-1 P11-N	OR NBR-70-1 P15-N	OR NBR-70-1 P20-N	1	1
28	O-Ring	OR NBR-90 P18-N	OR NBR-90 P28-N	OR NBR-90 P32-N	–	2
29	O-Ring	OR NBR-90 P22-N	OR NBR-90 P28-N	OR NBR-90 P36-N	2	2

★ Used only for models with auxiliary pilot pressure (P).

HCT-03, 06, 10
HCG-03, 06, 10

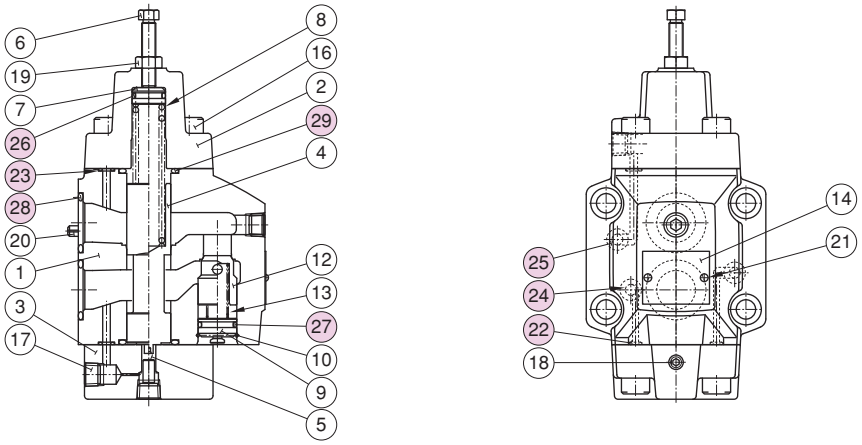

Item	Name of Parts	Part Numbers			Qty.	
		HCT HCG -03	HCT HCG -06	HCT HCG -10	HCT-*	HCG-*
22	O-Ring	OR NBR-90 P4-N	OR NBR-90 P4-N	OR NBR-90 P4-N	–	3★
23	O-Ring	OR NBR-90 P6-N	OR NBR-90 P6-N	OR NBR-90 P6-N	4	4
24	O-Ring	OR NBR-90 P9-N	OR NBR-90 P9-N	OR NBR-90 P9-N	–	1★
25	O-Ring	OR NBR-90 P9-N	OR NBR-90 P9-N	OR NBR-90 P9-N	–	2
26	O-Ring	OR NBR-70-1 P11-N	OR NBR-70-1 P15-N	OR NBR-70-1 P20-N	1	1
27	O-Ring	OR NBR-90 P12-N	OR NBR-90 P18-N	OR NBR-90 P22A-N	1	1
28	O-Ring	OR NBR-90 P18-N	OR NBR-90 P28-N	OR NBR-90 P32-N	–	2
29	O-Ring	OR NBR-90 P22-N	OR NBR-90 P28-N	OR NBR-90 P36-N	2	2

★ Used only for models with auxiliary pilot pressure (P).

Pressure Reducing Valves
Pressure Reducing and Check Valves

Pressure reducing valves are used to set the pressure of a hydraulic circuit below that of the main circuit. In addition, operation under remote control is possible by using the remote control port. Pressure reducing and check valves have check valves, which allow a free flow from the secondary side to the primary.

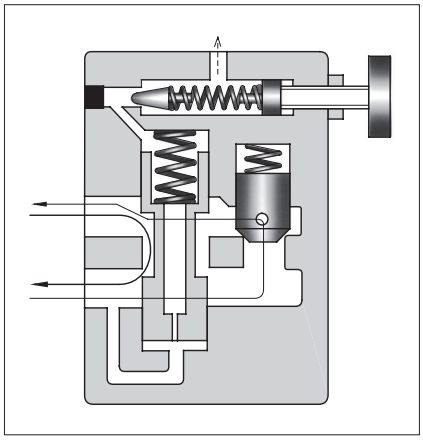

Specifications

Model Numbers		Max. Operating Pres. MPa	Max. Flow★1		Drain★2 Flow L/min	Approx. Mass kg	
Threaded Connection	Sub-plate Mounting		Setting Pressure MPa	Max. Flow L/min		R∗T Type	R∗G Type
RT RCT-03-∗-22	RG RCG-03-∗-22	21	0.7 - 1.0	40	0.8 - 1.0	RT : 4.3 RCT : 4.8	RG : 4.5 RCG : 5.4
			1.0 - 20.5	50			
RT RCT-06-∗-22	RG RCG-06-∗-22	21	0.7 - 1.0	50	0.8 - 1.1	RT : 6.9 RCT : 7.8	RG : 6.8 RCG : 8.1
			1.0 - 1.5	100			
			1.5 - 20.5	125			
RT RCT-10-∗-22	RG RCG-10-∗-22	21	0.7 - 1.0	130	1.2 - 1.5	RT : 12.0 RCT : 13.8	RG : 11.0 RCG : 13.8
			1.0 - 1.5	180			
			1.5 - 10.5	220			
			10.5 - 20.5	250			

★1. The max. flow rates are those shown at the primary pressure at 21 MPa.
★2. The drain flow rates are equal to pilot flow rates when differential pressure between primary and secondary pressure is at 20.5 MPa.

Yuken can offer flanged connection valves described below.
For details, contact us.

Model Numbers	Max. Operating Pres. MPa	Max. Flow L/min
RF RCF-10-∗-22	21	250
RF RCF-16-∗-20		500

Graphic Symbols

RT・RG

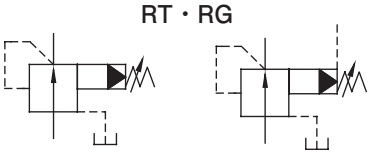

Remote control connection

RCT・RCG

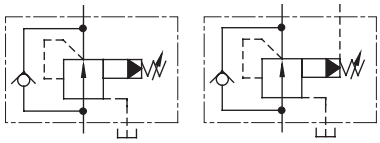

Remote control connection

Model Number Designation

RC	T	−03	−B	−22
Series Number	Type of Mounting	Valve Size	Pres. Adj. Range MPa	Design Number
R : Pressure Reducing Valves RC : Pressure Reducing and Check Valves	T : Threaded Connection	03	B : 0.7 - 7 C : 3.5 - 14 H : 7 - 20.5	22
		06		22
		10		22
	G : Sub-plate Mounting	03		22
		06		22
		10		22

Sub-plates

Valve Model Numbers	Sub-plate Model Numbers	Thread Size Rc	Approx. Mass kg
RG RCG-03	HGM-03-20	3/8	1.6
	HGM-03X-20	1/2	
RG RCG-06	HGM-06-20	3/4	2.4
	HGM-06X-20	1	3.0
RG RCG-10	HGM-10-20	1 1/4	4.8
	HGM-10X-20	1 1/2	5.7

- Sub-plates are available. Specify the sub-plate model number from the table left. When sub-plates are not used, the mounting surface should have a good machined finish. (1.6/)
- The sub-plates are the same as those for H type pressure control valves. With the reducing and check valve, the sub-plate is used in a position 180° turned (upside down) from the normal position. When mounting the sub-plate, be sure to bring the valve locating pin to the sub-plate pin hole. For dimensions, see page C-32. For instruction details, see page C-33.

Instructions

- To adjust the pressure, loosen the lock nut and turn the pressure adjustment handle slowly clockwise for higher pressures and anti-clockwise for lower pressures. After adjustments, do not forget to tighten the lock nut.
- Connect the drain port directly to the reservoir in which case the pressure at the drain port should be kept at a low back pressure close to the atmospheric pressure.

Accessories

Mounting Bolts

Valve Model Numbers	Socket Head Cap Screw
RG–03	M10□50L…4 Pcs.
RG–06	M10□50L…4 Pcs.
RG–10	M10□50L…6 Pcs.

Valve Model Numbers	Socket Head Cap Screw
RCG–03	M10□70L…4 Pcs.
RCG–06	M10□80L…4 Pcs.
RCG–10	M10□90L…6 Pcs.

RT-03

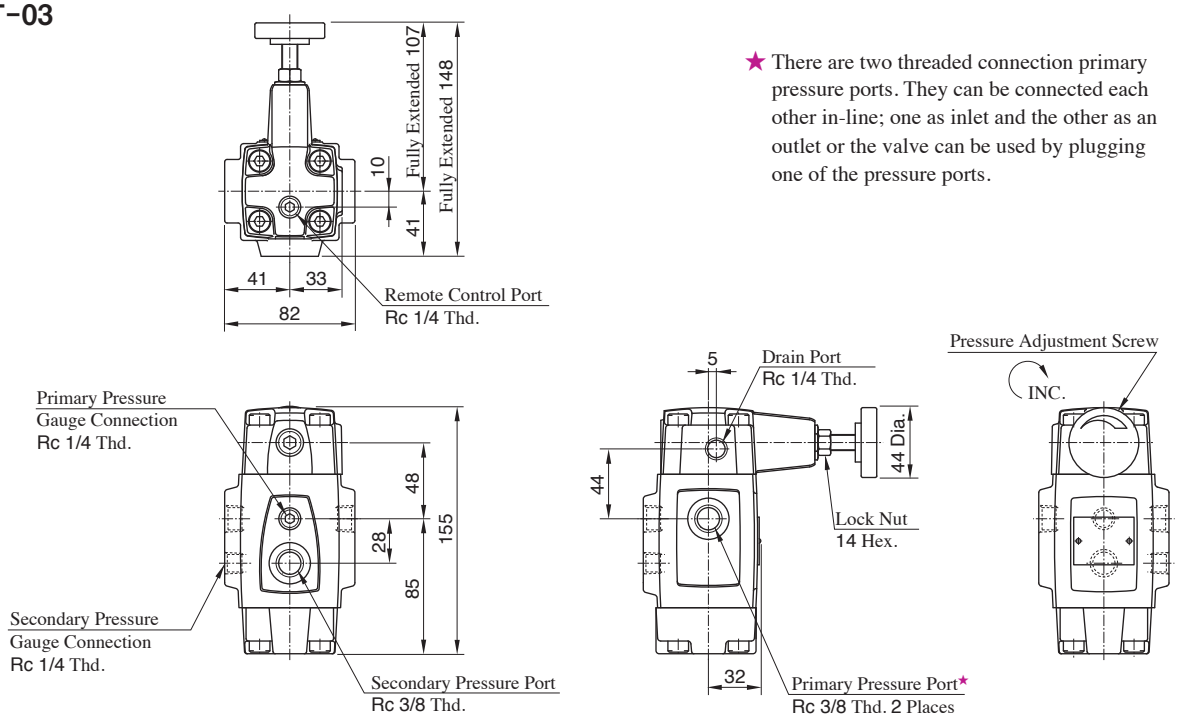

★ There are two threaded connection primary pressure ports. They can be connected each other in-line; one as inlet and the other as an outlet or the valve can be used by plugging one of the pressure ports.

RT-06, 10

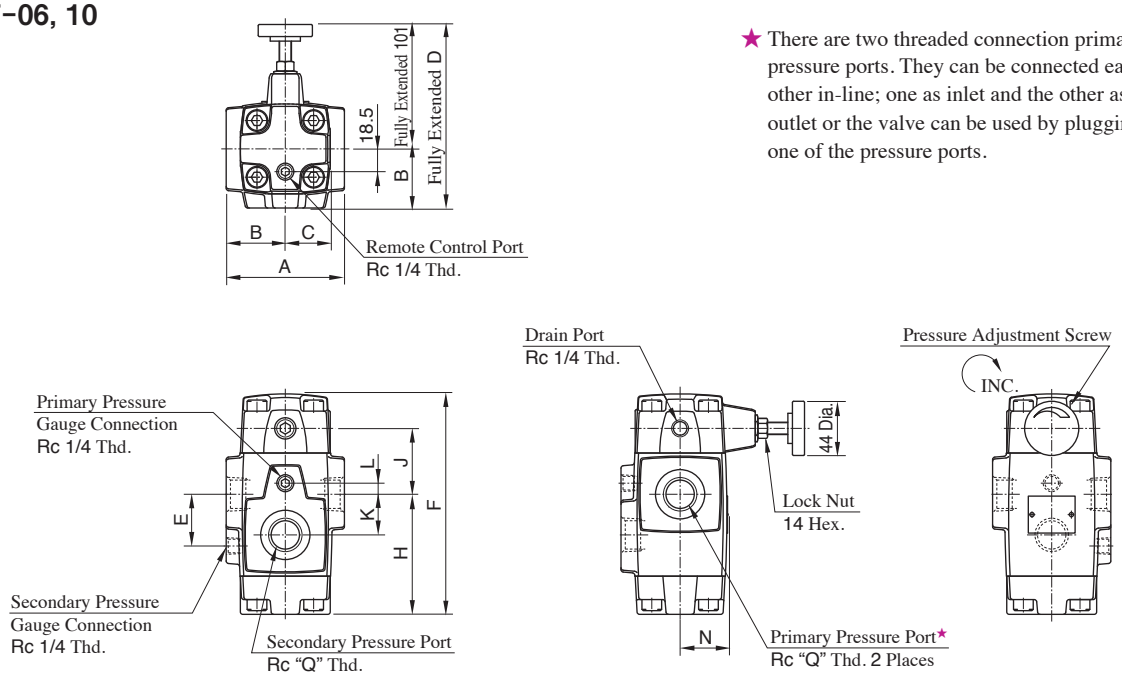

★ There are two threaded connection primary pressure ports. They can be connected each other in-line; one as inlet and the other as an outlet or the valve can be used by plugging one of the pressure ports.

Model Numbers	A	B	C	D	E	F	H	J	K	L	N	Q
RT-06	96	48	36.5	149	42	179	97.5	53.5	33	9	39	3/4
RT-10	132	66	43	167	52	216	124	64	40	12	46	1 1/4

RG-03, 06

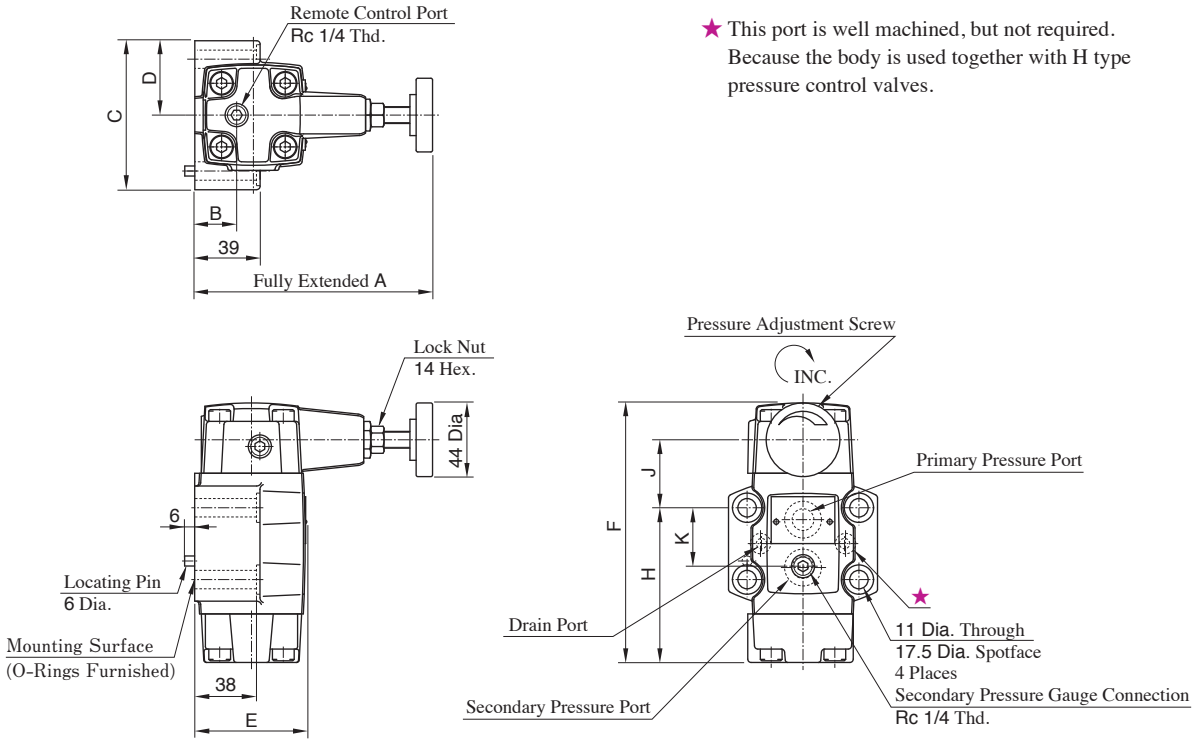

★ This port is well machined, but not required. Because the body is used together with H type pressure control valves.

Model Numbers	A	B	C	D	E	F	H	J	K
RG-03	142	25	89	44.5	67	155.5	92.4	40.6	34.9
RG-06	141	21.5	102	51	79	179	111	40	48

Note: For dimensions of the valve mounting surface, see the dimensional drawing (page C-32) of the sub-plate used together.

RG-10

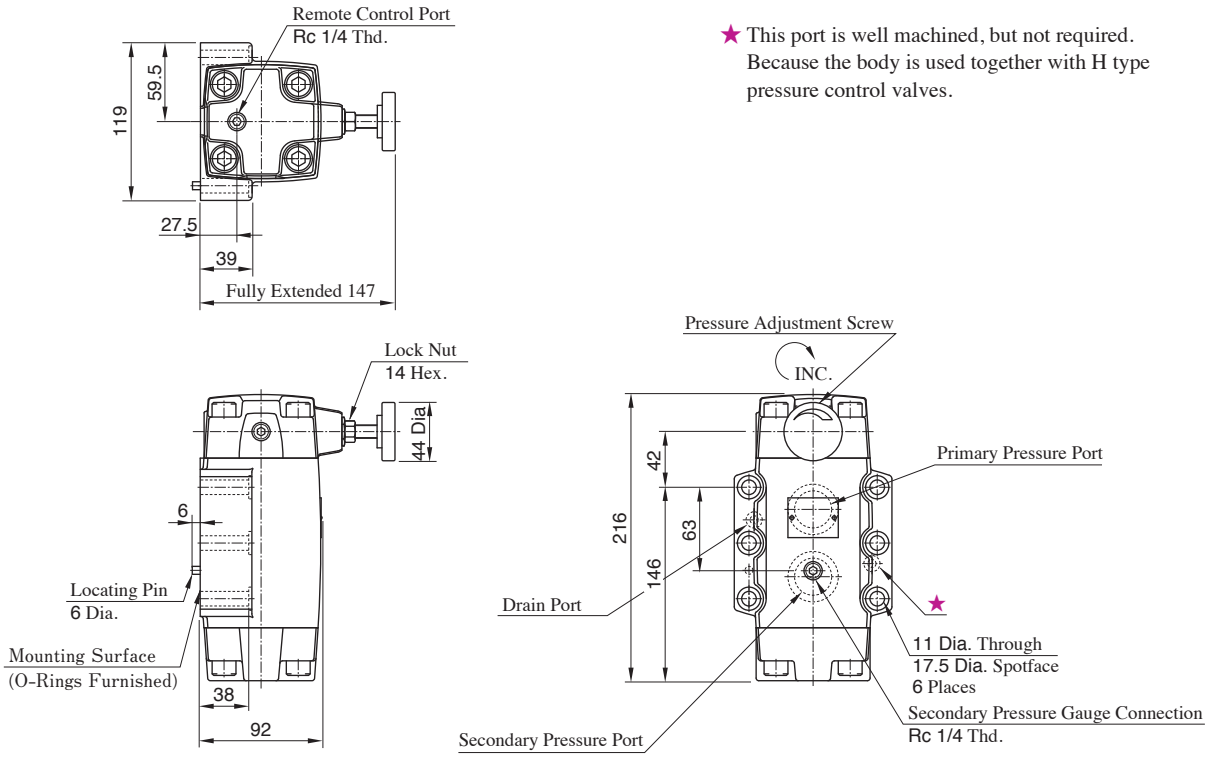

★ This port is well machined, but not required. Because the body is used together with H type pressure control valves.

Note: For dimensions of the valve mounting surface, see the dimensional drawing (page C-32) of the sub-plate used together.

RCT-03

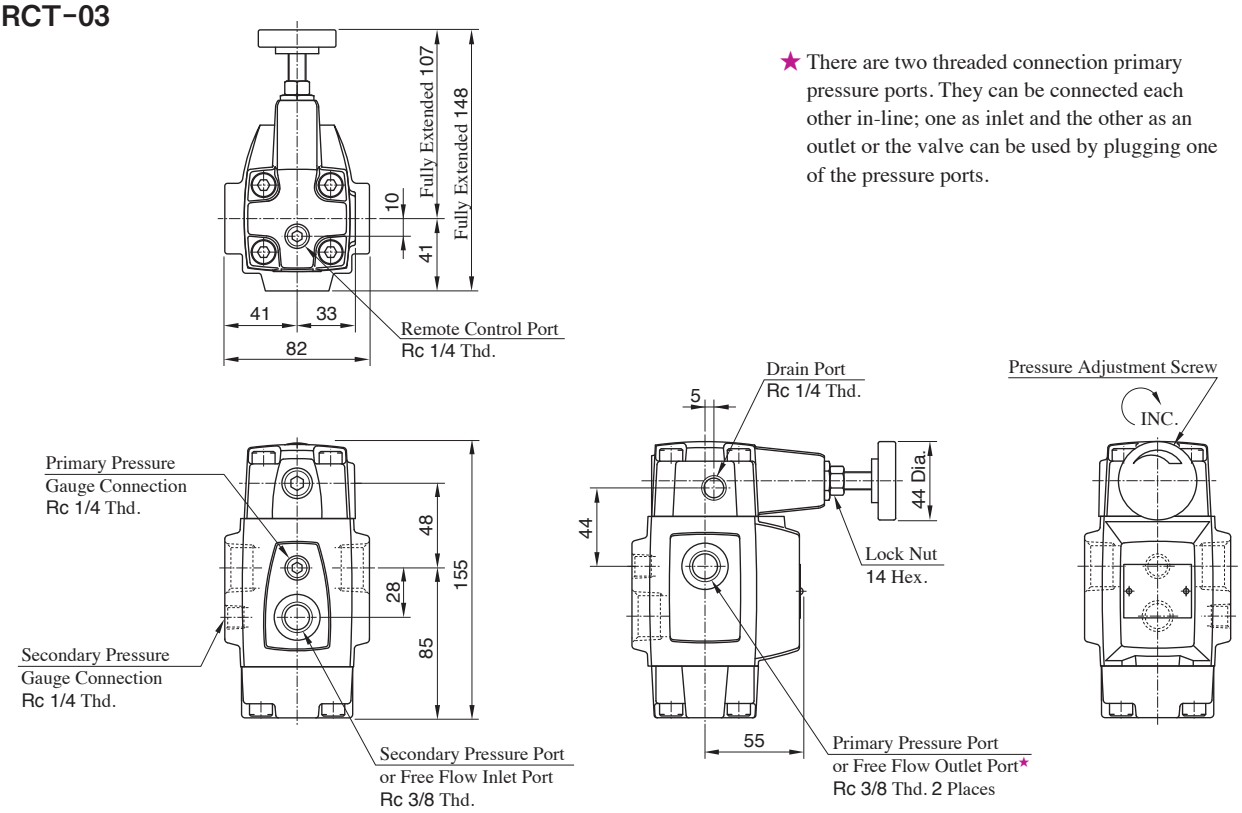

★ There are two threaded connection primary pressure ports. They can be connected each other in-line; one as inlet and the other as an outlet or the valve can be used by plugging one of the pressure ports.

RCT-06, 10

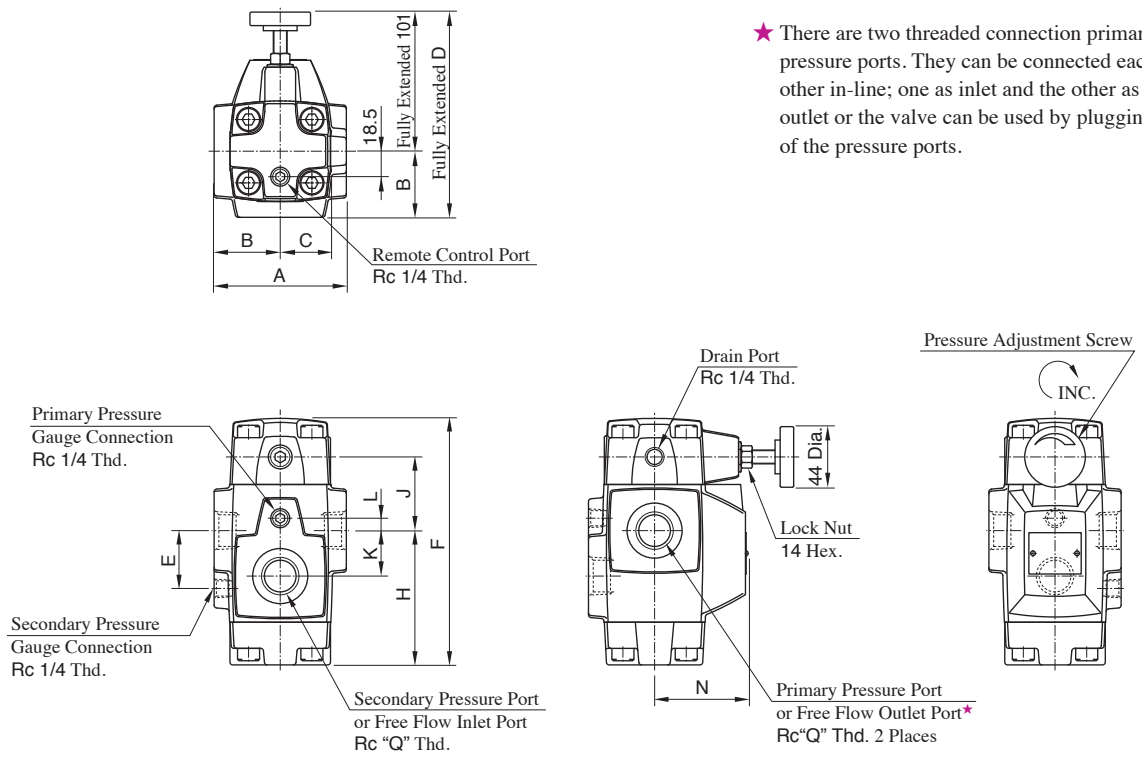

★ There are two threaded connection primary pressure ports. They can be connected each other in-line; one as inlet and the other as an outlet or the valve can be used by plugging one of the pressure ports.

Model Numbers	A	B	C	D	E	F	H	J	K	L	N	Q
RCT-06	96	48	36.5	149	42	179	97.5	53.5	33	9	68	3/4
RCT-10	132	66	43	167	52	216	124	64	40	12	86	1 1/4

RCG-03, 06

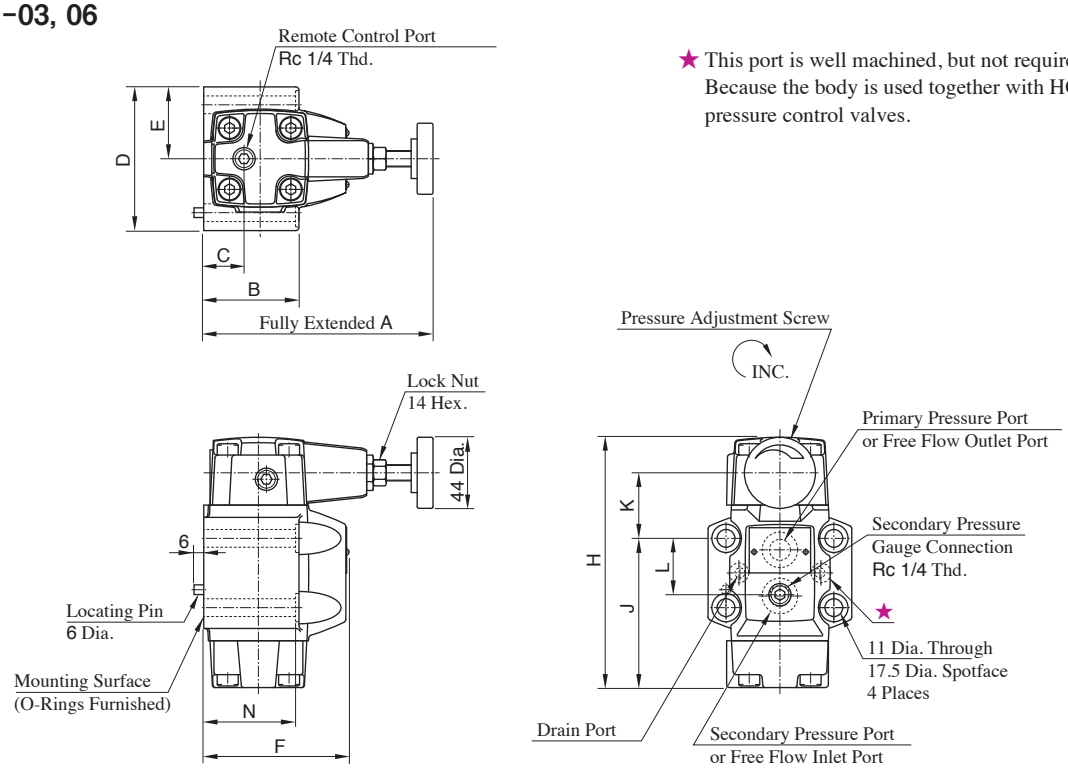

★ This port is well machined, but not required. Because the body is used together with HC type pressure control valves.

Model Numbers	A	B	C	D	E	F	H	J	K	L	N
RCG–03	142	59	25	89	44.5	90	155.5	92.4	40.6	34.9	58
RCG–06	141	69	21.5	102	51	108	179	111	40	48	68

Note: For dimensions of the valve mounting surface, see the dimensional drawing (page C-32) of the sub-plate used together.

RCG-10

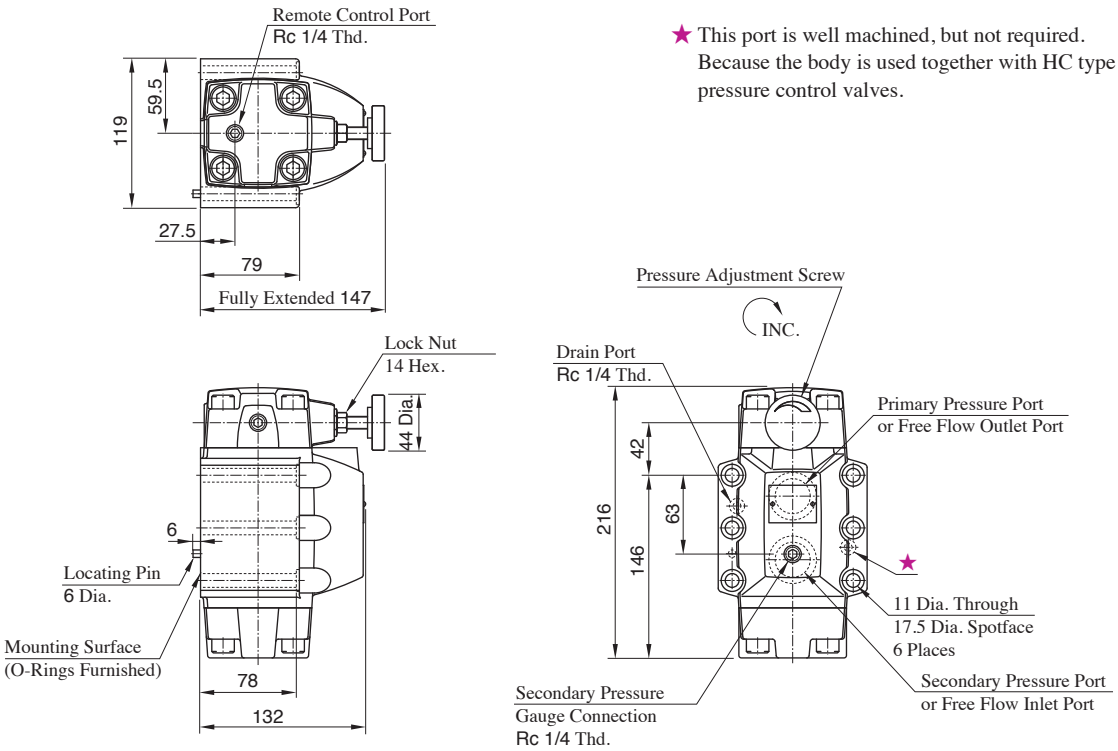

★ This port is well machined, but not required. Because the body is used together with HC type pressure control valves.

Note: For dimensions of the valve mounting surface, see the dimensional drawing (page C-32) of the sub-plate used together.

Pressure Drop for Reversed Free Flow

Hydraulic Fluid:
Viscosity 35 mm²/s, Specific Gravity 0.850

RCT-03
RCG-03

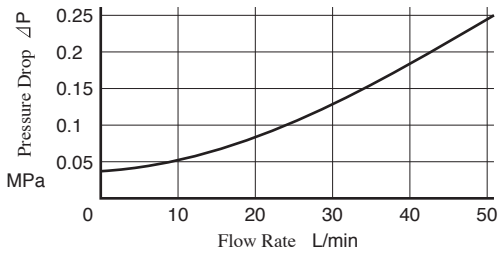

RCT-10
RCG-10

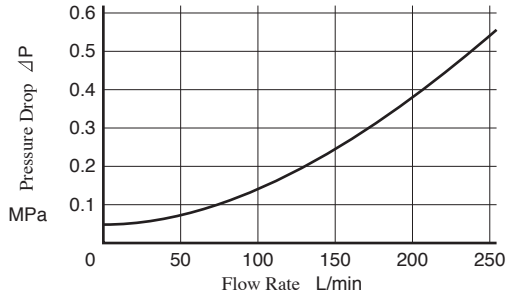

RCT-06
RCG-06

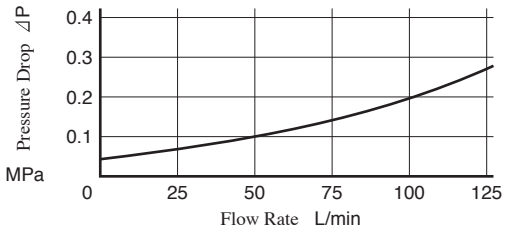

● For any other viscosity, multiply the factors in the table below.

Viscosity mm²/s	15	20	30	40	50	60	70	80	90	100
Factor	0.81	0.87	0.96	1.03	1.09	1.14	1.19	1.23	1.27	1.30

● For any other specific gravity (G'), the pressure drop (P') may be obtained from the formula below.
⊿P'= ⊿P (G'/0.850)

Flow Rate vs. Secondary Pressure

Primary Pressure : 21 MPa
Hydrauric Fluid : Viscosity 35 mm²/s

RT/RG-03
RCT/RCG-03

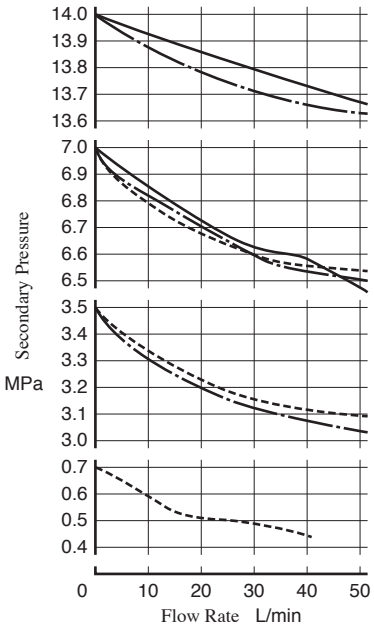

RT/RG-06
RCT/RCG-06

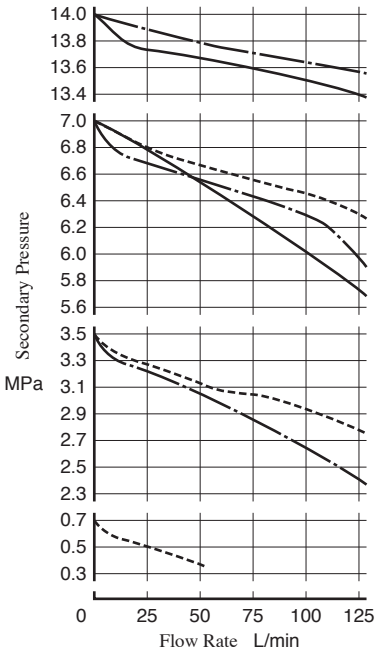

RT/RG-10
RCT/RCG-10

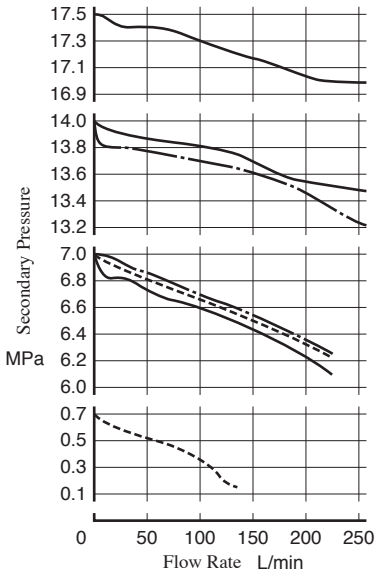

Pressure Adj. Range
- - - - - - - - - - : "B"
—·—·— : "C"
———— : "H"

List of Seals

RT-03, 06, 10
RG-03, 06, 10

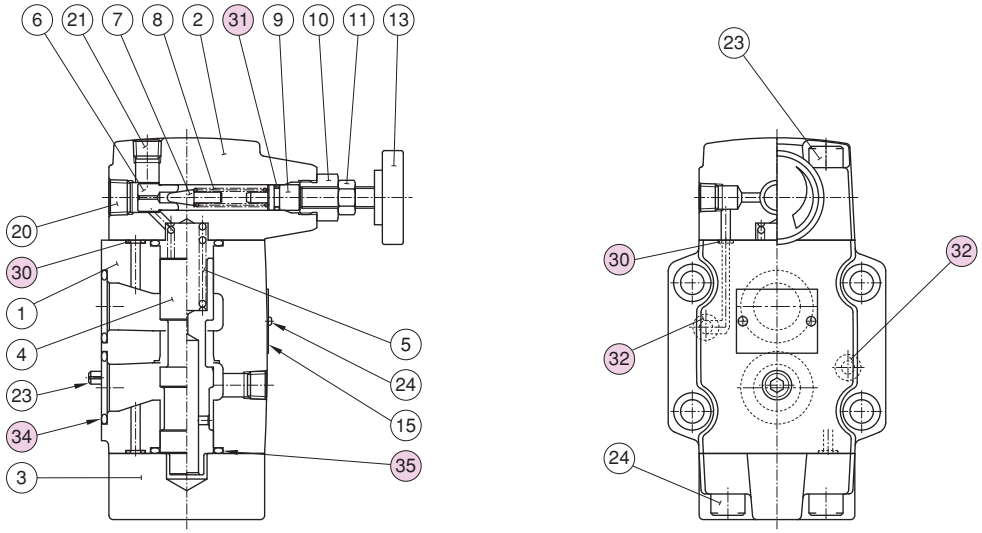

Item	Name of Parts	Part Numbers			Qty.	
		RT RG -03	RT RG -06	RT RG -10	RT-*	RG-*
30	O-Ring	OR NBR-90 P6-N	OR NBR-90 P6-N	OR NBR-90 P6-N	4	4
31	O-Ring	OR NBR-70-1 P9-N	OR NBR-70-1 P9-N	OR NBR-70-1 P9-N	1	1
32	O-Ring	OR NBR-90 P9-N	OR NBR-90 P9-N	OR NBR-90 P9-N	–	2
34	O-Ring	OR NBR-90 P18-N	OR NBR-90 P28-N	OR NBR-90 P32-N	–	2
35	O-Ring	OR NBR-90 P22-N	OR NBR-90 P28-N	OR NBR-90 P36-N	2	2

RCT-03, 06, 10
RCG-03, 06, 10

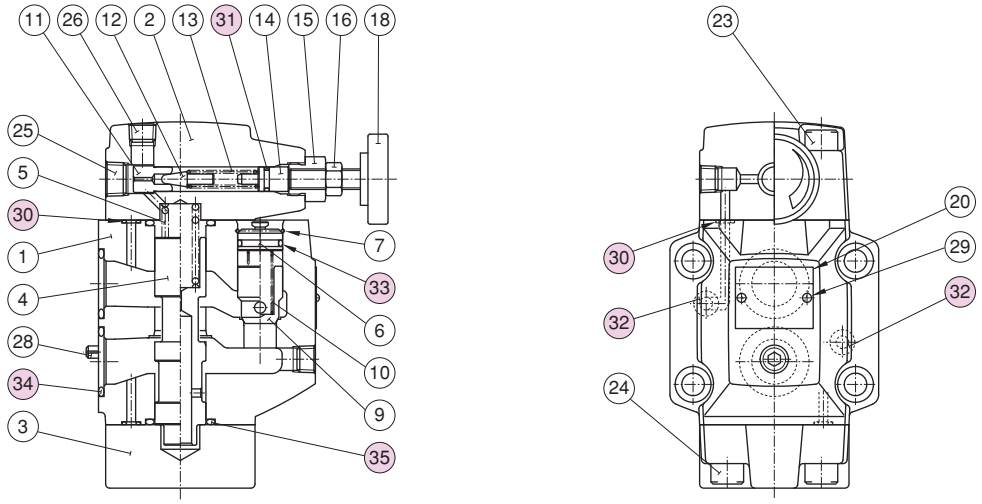

Item	Name of Parts	Part Numbers			Qty.	
		RCT RCG -03	RCT RCG -06	RCT RCG -10	RCT-*	RCG-*
30	O-Ring	OR NBR-90 P6-N	OR NBR-90 P6-N	OR NBR-90 P6-N	4	4
31	O-Ring	OR NBR-70-1 P9-N	OR NBR-70-1 P9-N	OR NBR-70-1 P9-N	1	1
32	O-Ring	OR NBR-90 P9-N	OR NBR-90 P9-N	OR NBR-90 P9-N	–	2
33	O-Ring	OR NBR-90 P12-N	OR NBR-90 P18-N	OR NBR-90 P22A-N	1	1
34	O-Ring	OR NBR-90 P18-N	OR NBR-90 P28-N	OR NBR-90 P32-N	–	2
35	O-Ring	OR NBR-90 P22-N	OR NBR-90 P28-N	OR NBR-90 P36-N	2	2

Pressure Reducing and Relieving Valves

Pressure reducing and relieving valves are composite pressure control valves having pressure reducing and counterbalancing functions developed for hydraulic balancing circuits.

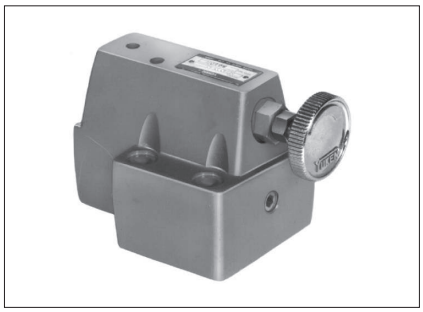

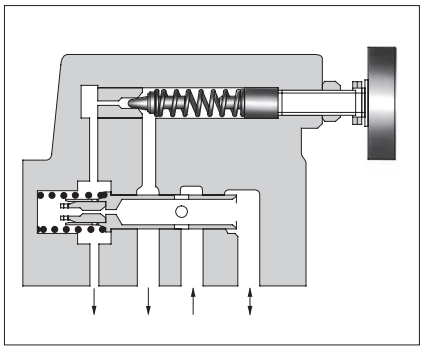

Specifications

Model Numbers	Max. Operating Pres. MPa	Pres. Adj. Range MPa	Max. Flow L/min	Relieving Flow L/min	Drain Flow L/min	Approx. Mass kg
RBG-03-＊-10	14	0.6 - 13.5	50	50	0.6 - 1	4.2
RBG-06-＊-10	25	0.8 - 24.5	125	125	1.5 - 2	11

Model Number Designation

RB	G	−03	−R	−10
Series Number	Type of Mounting	Valve Size	Drain Type	Design Number
RB : Pressure Reducing and Relieving Valves	G : Sub-plate Mounting	03 06	None: Internal Drain R : External Drain	10

Graphic Symbols

Internal Drain External Drain

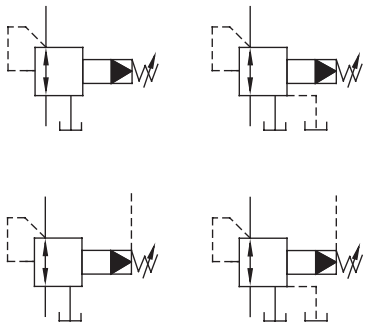

Vent Connection

Instructions

- To use remote control relief valve in the venting circuit, see page C-3. If the internal volume of the vent line is too large, chattering is likely to occur. Thus, as far as possible reduce the inside diameter and the length of the pipe.
- To adjust the pressure, loosen the lock nut and turn the pressure adjustment handle slowly clockwise for higher pressures and anti-clockwise for lower pressures. After adjustments, do not forget to tighten the lock nut.
- Connect the tank pipe not to any other line but directly to the reservoir.

Sub-plates

Valve Model Numbers	Sub-plate Model Numbers	Thread Size Rc	Approx. Mass kg
RBG-03	RBGM-03-10	3/8	1.6
	RBGM-03X-10	1/2	
RBG-06	RBGM-06-10	3/4	4.8
	RBGM-06X-10	1	

- Sub-plates are available. Specify the sub-plate model number from the table above. When sub-plates are not used, the mounting surface should have a good machined finish. (1.6/)

Accessories

Mounting Bolts

Valve Model Numbers	Socket Head Cap Screw
RBG-03	M10□65L ..... 4 pcs.
RBG-06	M10□70L ..... 4 pcs.

RBG-03

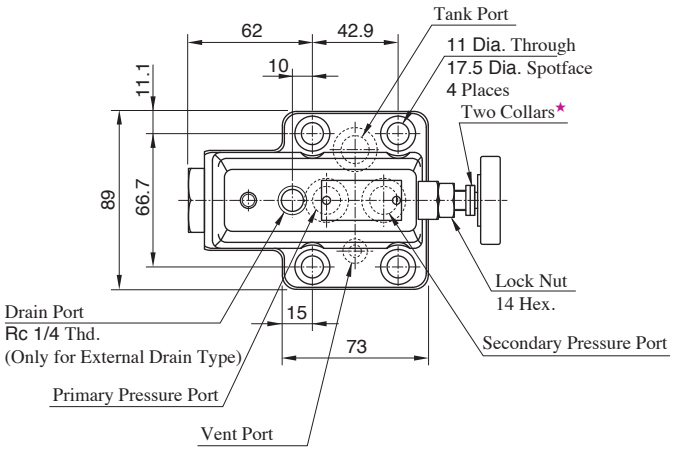

★ Pressure is limited by collars fitted. If a working pressure cannot be attained, remove some collars. One collar is equivalent to 10 MPa.

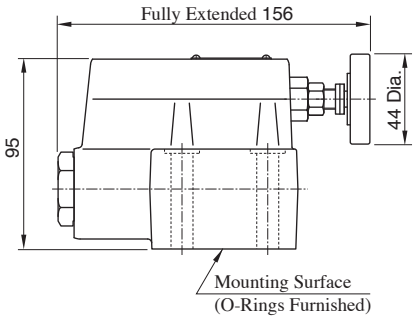

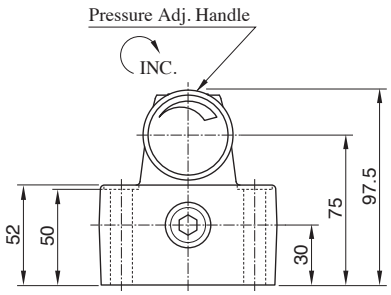

RBG-06

★ Pressure is limited by collars fitted. If a working pressure cannot be attained, remove some collars. One collar is equivalent to 10 MPa.

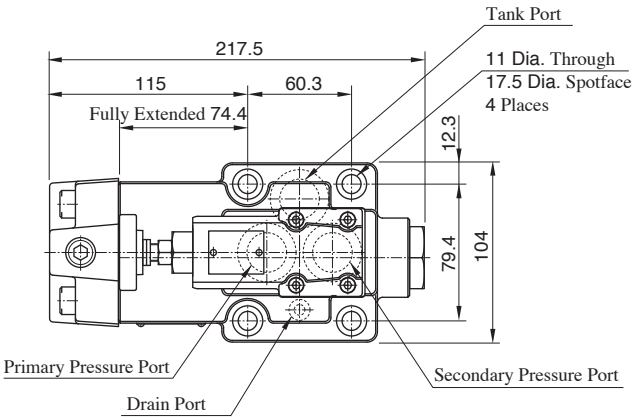

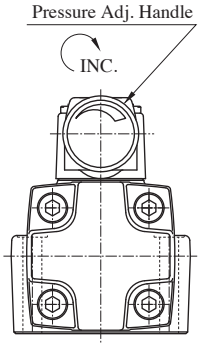

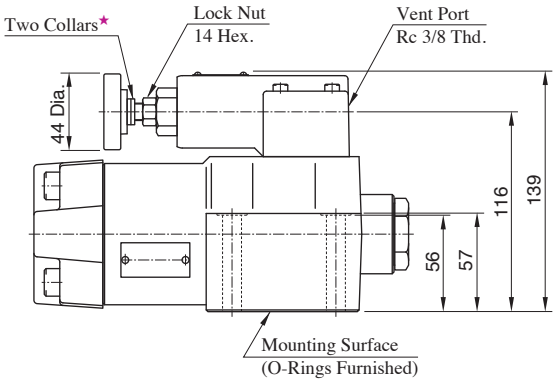

Sub-plate

RBGM-03*

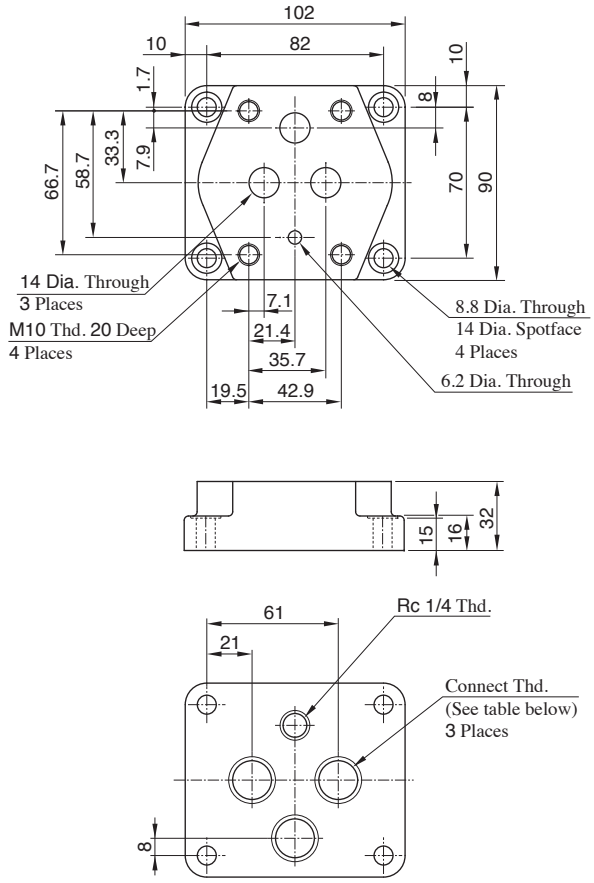

Sub-plate Model Numbers	Thread Size Rc
RBGM-03-10	3/8
RBGM-03X-10	1/2

RBGM-06*

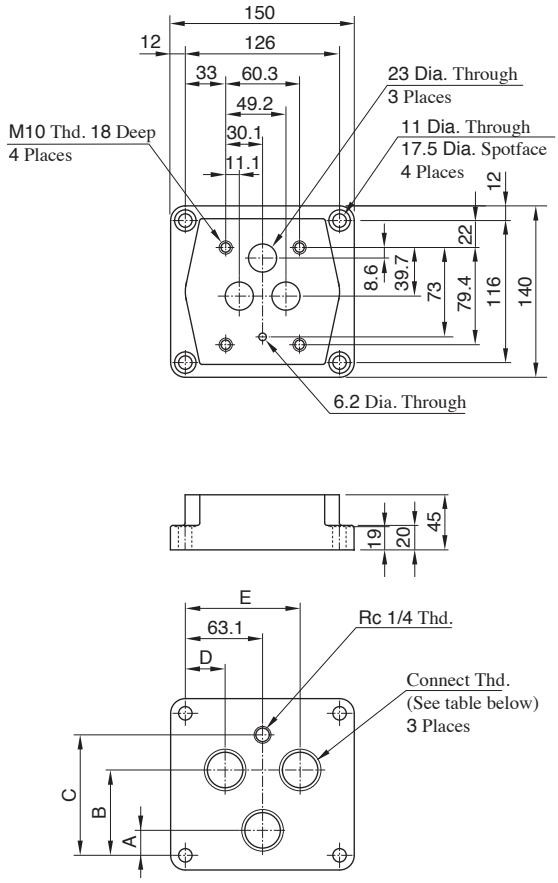

Sub-plate Model Numbers	Thread Size Rc	A	B	C	D	E
RBGM-06-10	3/4	20.7	65.7	95	37.1	89.1
RBGM-06X-10	1	20.4	69.7	98.4	32.5	93.8

Nominal Override Characteristics

Hydraulic Fluid: Viscosity 35 mm□/s
Specific Gravity 0.850

- - - - Relieving
——— Reducing

RBG-03

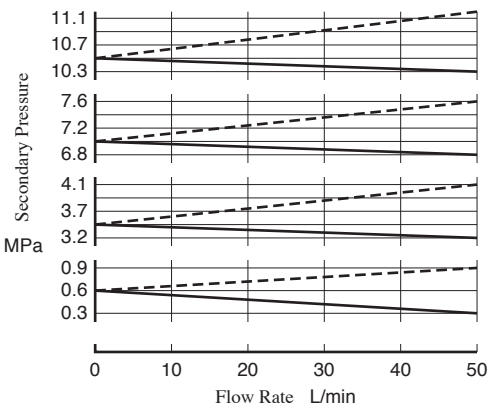

RBG-06

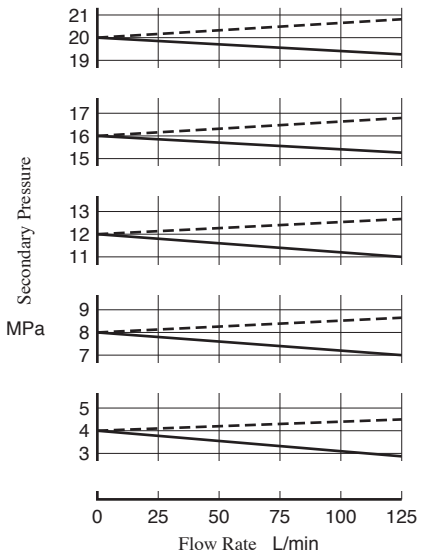

Min. Adj. Pressure & Vent Pressure

Hydraulic Fluid: Viscosity 35 mm²/s
Specific Gravity 0.850

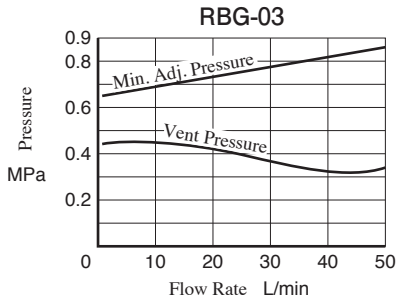

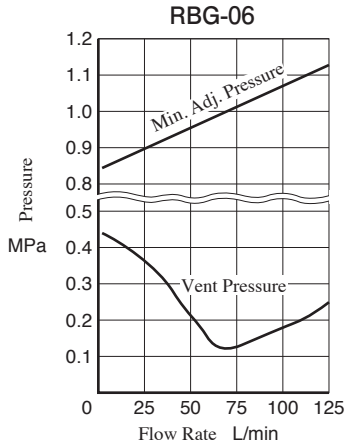

Pressure Drop

Hydraulic Fluid: Viscosity 35 mm²/s
Specific Gravity 0.850

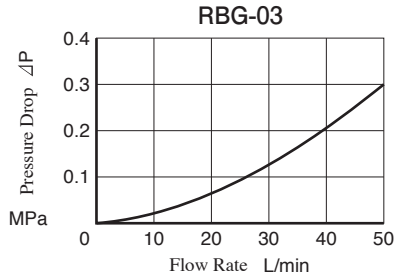

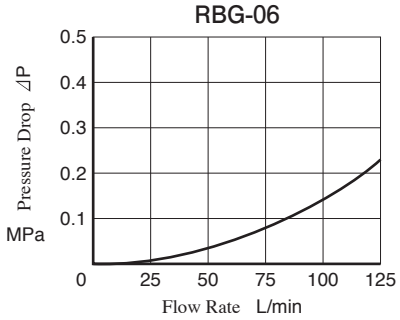

- For any other viscosity, multiply the factors in the table right.
- For any other specific gravity (G'), the pressure drop (P') may be obtained from the formula below.
  ⊿P'= ⊿P (G'/0.850)

Viscosity mm²/s	15	20	30	40	50	60	70	80	90	100
Factor	0.81	0.87	0.96	1.03	1.09	1.14	1.19	1.23	1.27	1.30

List of Seals

RBG-03

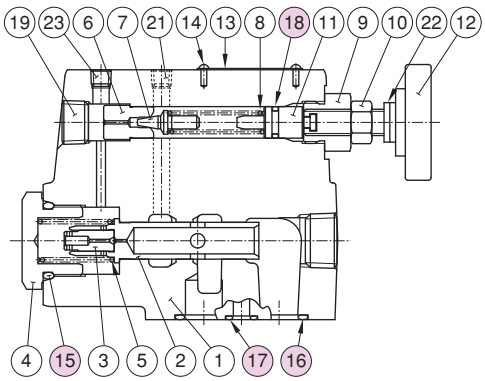

Item	Name of Parts	Part Numbers	Qty.
15	O-Ring	OR NBR-90 P24-N	1
16	O-Ring	OR NBR-90 P18-N	3
17	O-Ring	OR NBR-90 P9-N	1
18	O-Ring	OR NBR-70-1 P9-N	1

RBG-06

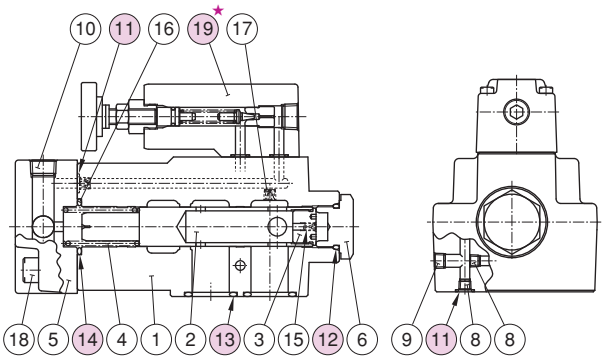

Item	Name of Parts	Part Numbers	Qty.
11	O-Ring	OR NBR-90 P9-N	2
12	O-Ring	OR NBR-90 P24-N	1
13	O-Ring	OR NBR-90 P28-N	3
14	O-Ring	OR NBR-90 P30-N	1

★ For details of pilot relief valves item ⑲, see page C-4, DG-01.

Brake Valves

Brake valves are used on hydraulic cylinders and in brake circuits of hydraulic motors. They can brake with any pressure, permitting smooth stopping.

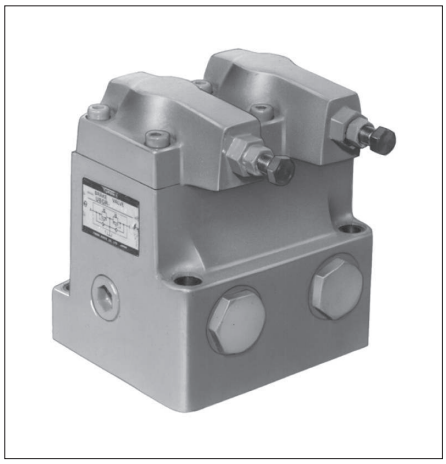

Graphic Symbols

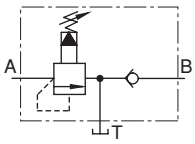

03
UBGR-06-A
10

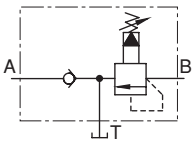

03
UBGR-06-B
10

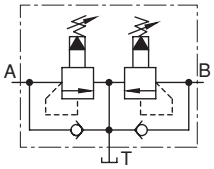

03
UBGR-06-W
10

Specifications

Model Numbers	Max. Operating Pres. MPa	Pres. Adj. Range MPa	Max. Flow L/min
UBGR-03-＊-B-20	25	0.7 - 7.0	50
UBGR-03-＊-H-20		3.5 - 25	
UBGR-06-＊-20		0.7 - 25	125
UBGR-10-＊-20		0.7 - 25	200

Unloading Relief Valves

These valves are used to operate the pumps with minimum load in accumulator circuits or in high-low pump circuits.

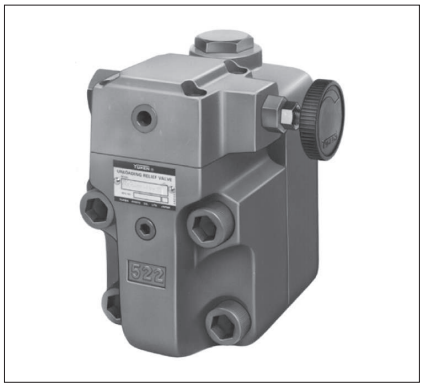

Specifications

Model Numbers	Max. Operating Pres. MPa	Pres. Adj. Range MPa	Max. Flow L/min
BUCG-06-＊＊-30	21	B：2.5 - 7.0 C：3.5 - 14 H：7.0 - 21	125
BUCG-10-＊＊-25			250

Graphic Symbol

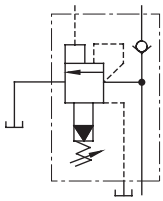

For details about Brake Valves and Unloading Relief Valves, please contact us.

Semiconductor Type Pressure Switches

These pressure switches have built-in electronic circuit on a semiconductor pressure sensor and an open collector insulated by a photocoupler has been used as output. As the use of semiconductor has put movable parts away from the sensor section, high reliability and durability can be obtained.
These pressure switches are suitable for the applications not only compact, light weight and vibration-proof are required but also better substitute to conventional pressure switches.

Model Number Designation

J	T	−02	−100	−11
Series Number	Type of Mounting	Valve Size	Max. Setting Pressure MPa	Design Number
J : Semiconductor Type Pressure Switch	T : Threaded Connection	02	35 : 3.5 100 : 10 200 : 20 350 : 35	11

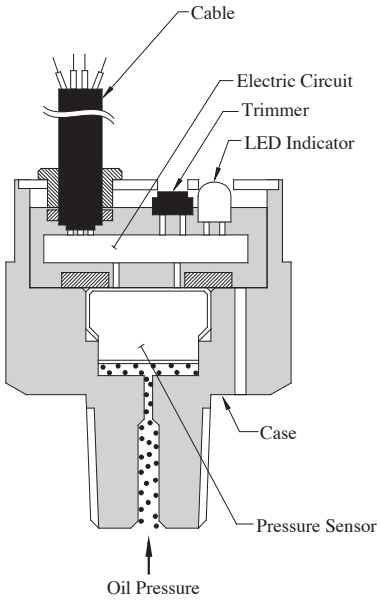

Descriptions \ Model Numbers	JT-02 -35-11	JT-02 -100-11	JT-02 -200-11	JT-02 -350-11
Max. Operating Pressure MPa	10	10	20	35
Proof Pressure MPa	20	20	40	50
Pressure Setting Range MPa	0.1 - 3.5	1 - 10	2 - 20	3.5 - 35
Pressure Setting (ON Pressure Setting)	Single adjustment: ON trimmer setting (variable resistor)★			
Differential Pressure Setting (OFF Pressure Setting)	Single adjustment: DIFF trimmer setting ★ (-1 to -10% of the ON pressure setting)			
Sign on act	When the ON pressure, the LED indicator lights.			
Output System	Open collector (photocoupler insulated) Maximum operating voltage : 35 VDC; maximum current: 100 mA			
Power Source	10 to 28 VDC (ripple included). A constant-voltage power supply must be used. Current consumption: 10 mA.			
Insulation Resistance	100 MΩ or more			
Response Time	1.5ms (no damper)	20 ms (damper contained)		
Repeatability	Approx. 0.5 %			
Operating Temperature Range	−20 - +70℃			
Setting Fluctuation with Temperature Drift	1% or less of the maximum operating pressure relative to 10 °C change.			
Storage Temperature Range	−40 - +105℃			
Dust-proofness / Water-Proofness	IEC Pub. 529 IP54			
Vibration-resistance	98m/s² (10 - 55 Hz) X direction : 2h, Y direction : 2h, Z direction : 2h			
Shock-resistance	98 m/s²			
Mass	175g			

★ Trimmer Rotation Angle: 0 to 260°

Graphic Symbol

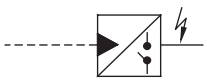

With Protect Cover

The models with protect cover those dust-proofness / water-proofness grade up to IP65 level is available.
(Example) JT-02-35-S-11
└ With Protect Cover

For details of the models with protect cover, please contact us.

Instructions

Voltage-proof test should not be carried out as semiconductor has been used.

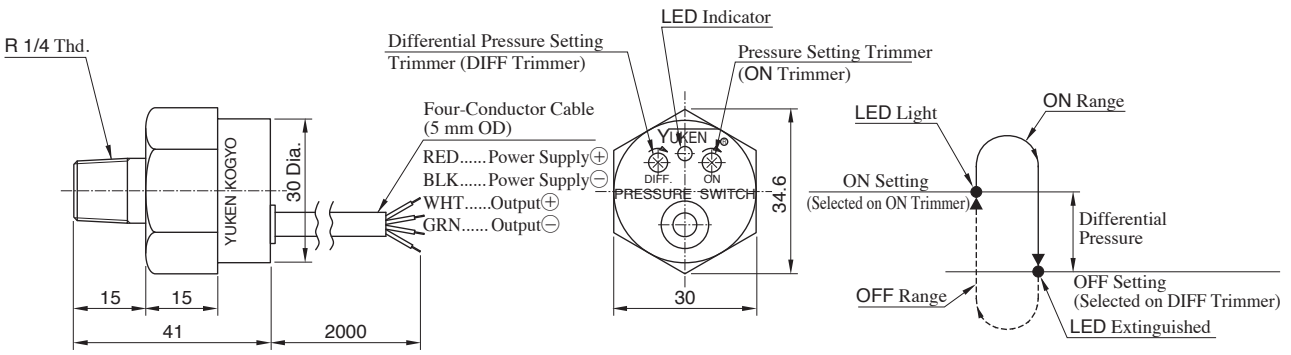

Adjustment

1. Before starting, turn the ON and DIFF trimmers fully clockwise. (Trimmer Rotation Angle:0 – 260°)
2. Turn on the power.
3. < ON pressure setting >
   Apply required pressure to the switch. Turn ON trimmer slowly anti-clockwise and stop it when LED indicator lights, ON setting obtained.
4. < Differential pressure setting >
   Gradually reduce pressure to obtain the required OFF pressure. Then, turn DIFF trimmer anti-clockwise slowly and stop it when LED indicator goes off. The OFF setting is now obtained.
5. Make sure if "ON" or "OFF" setting is correct by working of LED indicator when applying or reducing pressure repeatedly several times.

Application Examples of Electrical Circuit

Output Circuit of Semiconductor Type Pressure Switch (Internal Circuit)

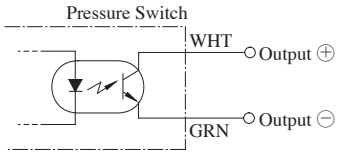

Direct Relay Drive

- Use relay operatable at 100 mA or lower.
- Connect surge voltage absorption diode (D) in parallel with the relay coil.
- Connect pretective diode (D) between the white and green wires.

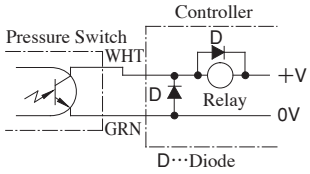

Connection to Sequential Controller

1. Sink System

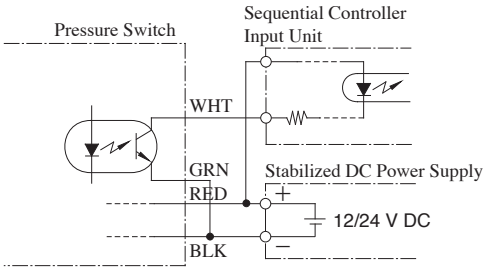

2. Source System

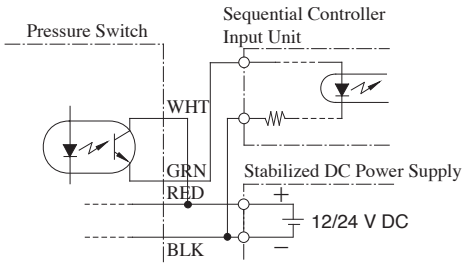

The usage below is possible because output circuit is insulated by a photocoupler.

1. When AND circuit Two Pressures

The sequential controller is signaled only when pressure switches No. 1 and 2 are both ON.

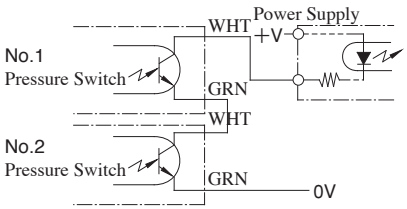

2. When OR circuit two pressures

The sequential controller is signaled when either of pressure switches No. 1 and 2 is ON.

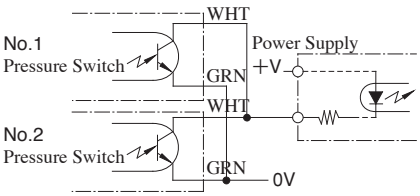

Pressure Monitoring System

The pressure monitoring system is for watching hydraulic system pressure and is composed of highly reliable pressure sensor (SJT*-02-10) and easy-to-use digital pressure monitor (DP*-*-*-10). There is no specific model number code for the pressure monitoring system itself, therefore, when ordering, specify the digital pressure monitor and pressure sensor with respective model number code.

● Remote Pressure Indication

Even if the monitor is located away from the unit, remote pressure indication can be obtained by combination with special sensors.

● Remote-Setting Pressure Switches

The pressure sensor can be used as a pressure switch with two contacts: top and bottom. Pressure can be set and checked without using any other pressure gauge, moreover, such pressure setting and pressure check can be made when no pressure is applied in the hydraulic system.

Digital Pressure Monitors

The digital pressure monitor indicates the system pressure and also dispatches signals when the system pressure reaches to the preset pressure. The monitor can be separated from the sensor and installed away from the sensor. The monitor and the sensor so separately installed can be connected by wire, therefore, a long hydraulic piping is not required. The digital pressure monitor provides high accuracy when it is used with a special pressure sensor (SJT*-02-10).

■ Specifications

Model Numbers	Input Voltage	Output System	Pressure Setting
DP20-✻-✻-10	0 - 4.5V/0 - 19.6 MPa	Open-collection output □2 40 V - 100 mA (max.)	Total 4 points: high (HI) and low (LO) limits for 2 channels (each set independently)
DP35-✻-✻-10	0 - 4.5V/0 - 34.3 MPa		

Pressure Sensors

The pressure sensor uses semiconductors and has no moving parts for high reliability and durability.
It provides high accuracy when combined with the special monitor (DP*-*-*-10)

■ Specifications

Model Numbers	Rated Pres. Range	Output Range ★	Power Supply
SJT20-02-10	0 - 20 MPa	0.5 - 4.5V	DC 5.0±0.5V
SJT35-02-10	0 - 35 MPa		

★ Proportional to supply voltage if this voltage is 5.00 V

Graphic Symbol

—— For details about Pressure Monitoring System, please contact us. ——

Electrical Conduit Connection

Details of Receptacle

Terminal Box Type

Double Solenoid Type

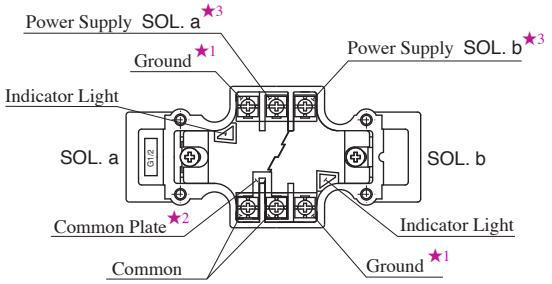

Single Solenoid Type (Sol b)

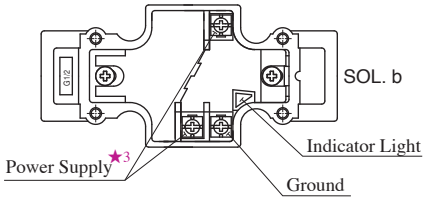

Plug-in Connector Type

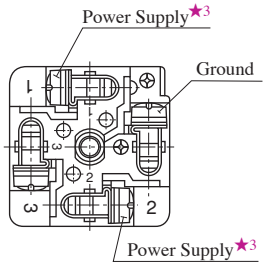

★1. There are two grounding terminals. You can use either one.
★2. If you do not need the common plate, remove it.
★3. With DC solenoids, polarity is no question.

Electrical Circuit (In Case of Single Solenoid Type)

Terminal Box Type

AC

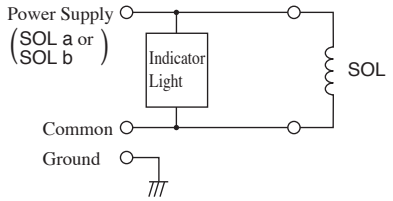

DC

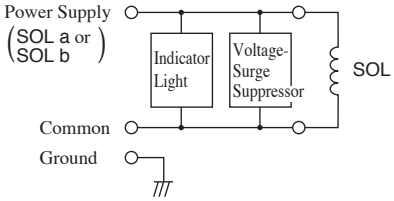

AC→DC Rectified

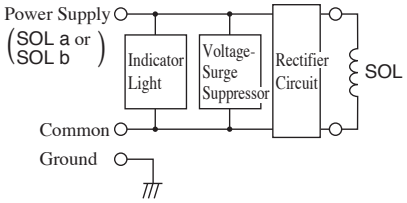

Plug-in Connector Type

AC

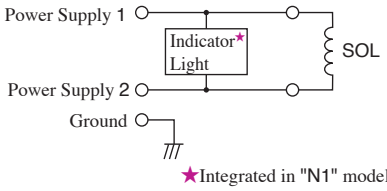

DC

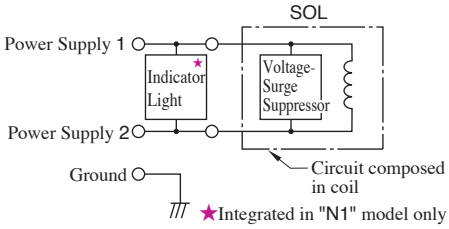

AC→DC Rectified

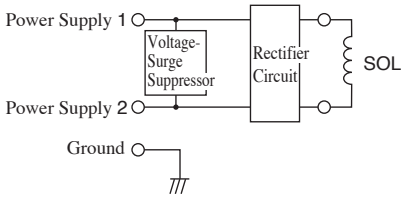

⚠ DANGER

- Do not perform wiring while the power is on.
  Doing so may result in electric shock, burns or death.
- Make the wiring properly. Improper wiring will cause an irregular movement of the machine, resulting in a grave accident.

Solenoid Ratings

Valve Type	Electric Source	Coil Type★3	Frequency (Hz)	Voltage (V)		Current & Power at Rated Voltage		
				Source Rating	Serviceable Range	Inrush★2 (A)	Holding (A)	Power (W)
Standard Type	AC★1	A100	50	100	80 - 110	2.42	0.51	——
			60	100	90 - 120	2.14	0.37	
				110		2.35	0.44	
		A120	50	120	96 - 132	2.02	0.42	
			60		108 - 144	1.78	0.31	
		A200	50	200	160 - 220	1.21	0.25	
			60	200	180 - 240	1.07	0.19	
				220		1.18	0.22	
		A240	50	240	192 - 264	1.01	0.21	
Shockless Type			60		216 - 288	0.89	0.15	
	DC (K Series)	D12	——	12	10.8 - 13.2	——	2.45	29
		D24		24	21.6 - 26.4		1.23	
		D48		48	43.2 - 52.8		0.61	
	AC→ DC Rectified	R100	50/60	100	90 - 110	——	0.33	29
		R200		200	180 - 220		0.16	

★1. AC Solenoid
AC solenoid is not available in shockless type.
R type models with built-in current rectifier is recommended for shockless operation with AC power.

★2. Inrush Current
Inrush current in the above table show rms values at maximum stroke.

★3. There are more coil types other than the above. For details, please make inquiries.

The coil type numbers in the shaded column are handled as opotinal extras. In case these coils are required to be chosen, please confirm the time of delivery with us before ordering.