MAESTRO®

52 - 80 - 100

IEMCA

MAESTRO®

PERFECTION IS AN ATTITUDE

The MAESTRO® is a range of automatic bar feeders for bars from 10 to 100 mm for fixed headstock lathes.
Ideal for those who require high performance and the utmost flexibility.

IEMCA

A HISTORY OF SUCCESS

People, Skills, Innovations and Investments have made IEMCA the Worldwide LEADER

1966
Model A

The **first** IEMCA **bar feeder**, model A, is officially presented at Milan's Trade Show.

1971
Model CS

First bar for feeder for sliding headstock able to machine **bars of 0.8 mm** diameter.

1973
Model T

First bar feeder in the world equipped with **multi-rack and bundle magazines**, for 5 times greater production autonomy.

1979
PRA

First bar feeder in the world for multi-spindle lathes equipped with a revolutionary patent: the "double bar pusher" or "**pre-feeding**".

1983
TAL

First bar feeder in the world equipped with **lubrication** inside the guide channel.

1991
BOSS

First bar feeder with full **electronic** control that redefines market standards.

1994
SIR

First integral bar feeder for multi-spindle lathes equipped with **guide channels of variable diameter**, thanks to the use of "sprockets" (IEMCA patent).

1998
MASTER

Bar feeder for machining **bars up to 80 mm** diameter.

2007
ELITE

Bar feeder for small diameter bars destined to become **the benchmark for micromechanics**.

1961
FOUNDING

4
PRODUCTION PLANTS

550
EMPLOYEES

+120.000
INSTALLATIONS

90
COUNTRIES

2013
BOSS HD SUPERFAST

The SUPERFAST platform reduces bar changeover time up to **37%** and cuts the headstock idle times to **zero**.

2017
SIR HEAVY DUTY

The perfect combination of: machine life cycle cost minimization, extreme flexibility and productivity maximization.

2018
MAESTRO® 80

Automatic bar feeder for **10 to 80 mm** bars for lathes with fixed headstock, to achieve very high performance and the utmost flexibility.

2020
NEXT 42 SLIDING

A machine unlike any other: the first multi-spindle bar feeder with sliding headstock, made to work alongside the DMG MORI MULTISPRINT multi-spindle lathes.

2009
MASTER HF

Hyper-Flexible technology for machining bars between 15 and 80 mm diameter without changing the guide channel.

2016
INDUSTRY 4.0

IEMCA bar feeders are the only ones in the world to provide Industry 4.0 technology: warning messages in case of alarm, telecontrol, teleservice, remote connection with other systems, etc.

2018
ELITE ZERO

The first bar feeder in the world for micromechanics, able to feed **0.3 mm bars**.

2018
UNIQA 42 HIGH PERFORMANCE

The machine tool for **preparing bars** with a diameter of 12 – 42 mm.

2021
MAESTRO® 52

Automatic bar feeder for bars from **10 to 49 mm** for fixed headstock lathes, to achieve very high performance and the utmost flexibility.

CONTENTS

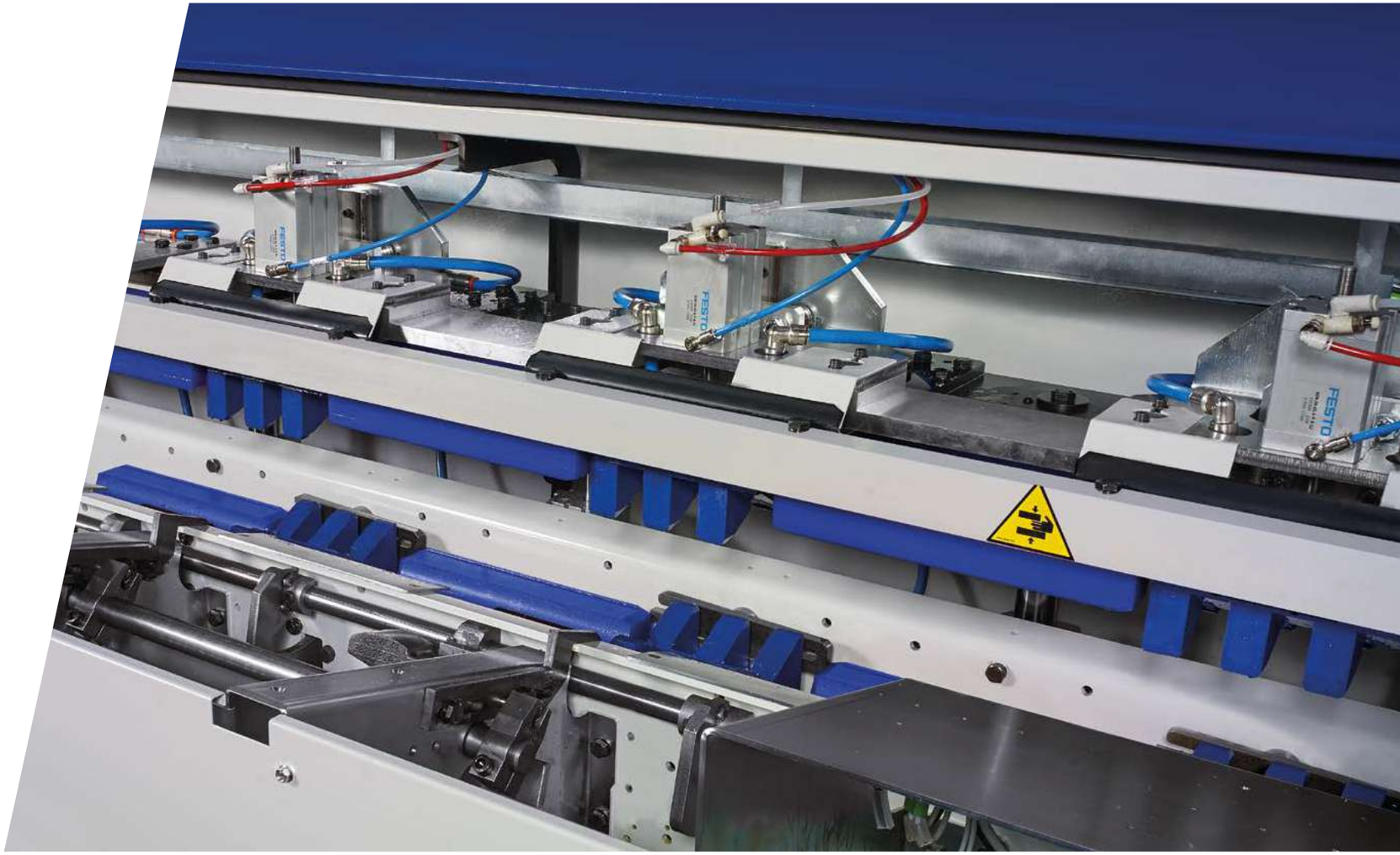

CONSTANT INVESTMENTS IN RESEARCH

To always be Pioneers in automation

MAESTRO® feeders are made in the IEMCA plant in Faenza, Emilia Romagna, Italy. It is the largest bar feeder plant in the world with an available surface area of more than 25,000 sq.m. More than 200 people work in this location everyday to develop new innovative technologies.

IEMCA has always been working to develop innovative solutions for the end users and to improve its products in terms of productivity, design, physical and cognitive ergonomics. IEMCA has always been working to develop innovative solutions for the end users and to improve its products in terms of productivity, design, physical and cognitive ergonomics. IEMCA works in cooperation with leading Italian Universities and Research Centers and is the technical partner of reference for machine manufacturers who aim to provide the final user with the best technological solutions.

INNOVATIVE SOLUTIONS

50 DESIGNERS

35 ACTIVE PATENTS

RESEARCH CENTERS

RESEARCH CENTERS

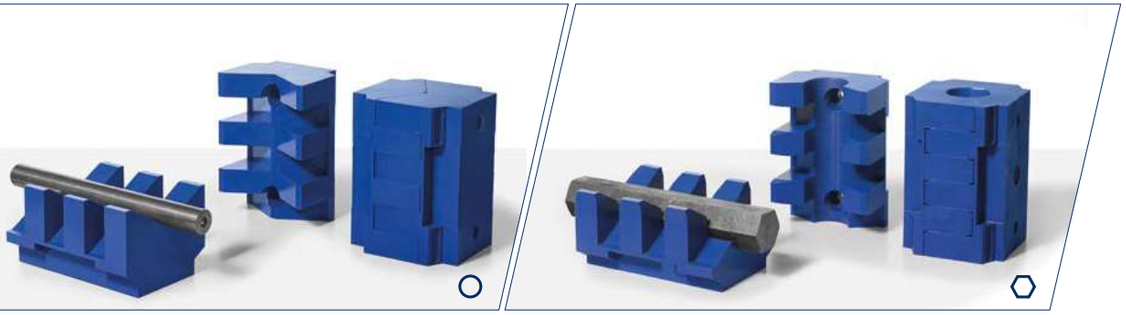

THE FLEXIBLE SOLUTION FOR FIXED HEADSTOCK LATHES

Unrivalled productivity, flexibility and ergonomics

MAESTRO® 52	MAESTRO® 80	MAESTRO® 100
Ø10 - 49 mm Space-saving	Ø10* - 80 mm	Ø10* - 100 mm

The MAESTRO® bar feeder range is the best possible synthesis of:
· Productivity maximization
· Great flexibility
· Physical and cognitive ergonomics
all with a new, modern DESIGN.

ABACOS®

Adaptive BAr COntrol System

ABACOS is a IEMCA patented system consisting of self-adjusting bushings that adapt to the bar being machined, with no need for the operator to carry out manual adjustments or set the diameter on the HMI.

ABACOS is able to carry out different operations at the same time:
- Guide the bar
- Dampen the bar vibrations via a pneumatic system
- Tighten the bar pusher

all without changing the guide channel.

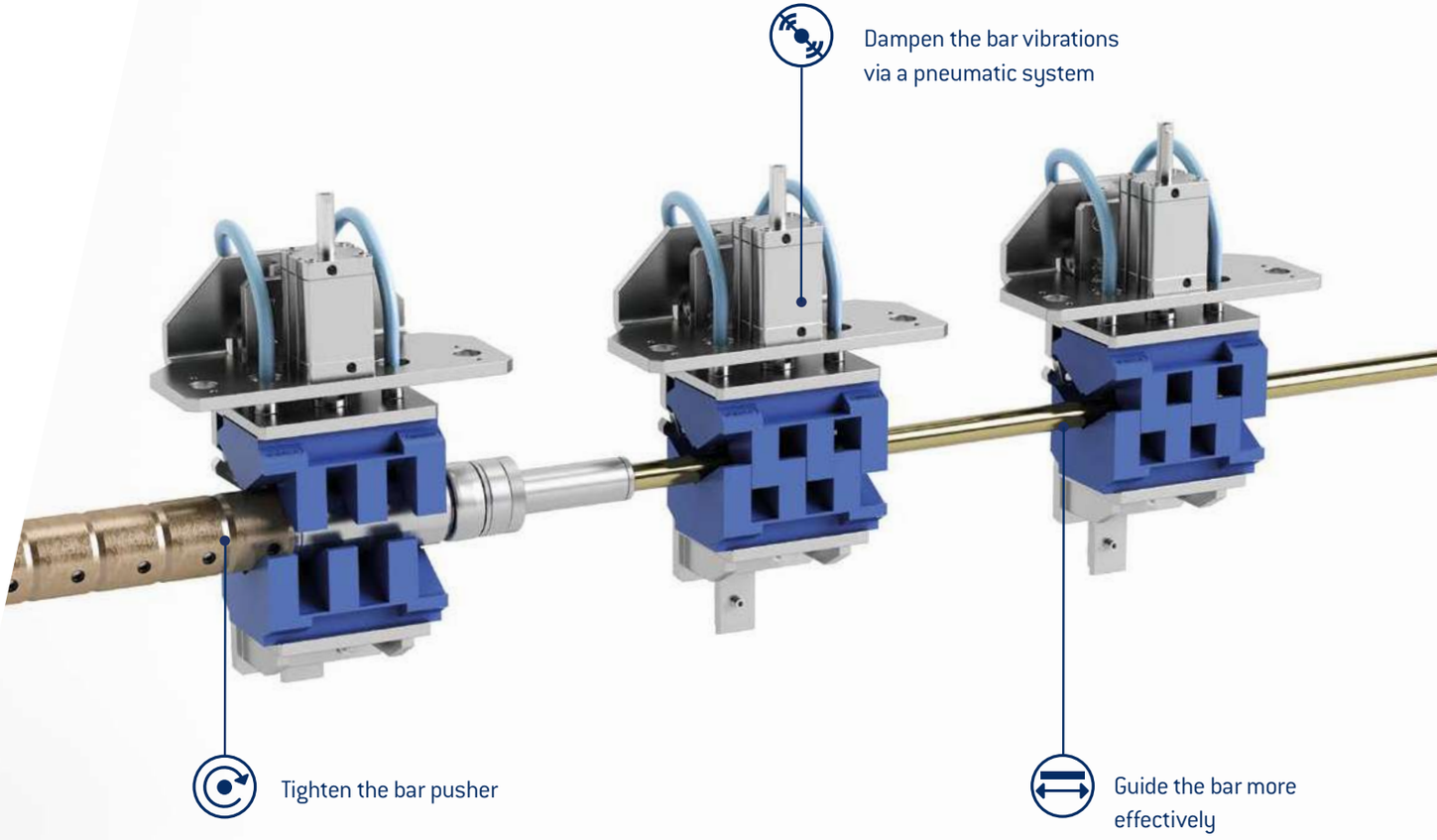

ABACOS allows to machine shaped bars (e.g. hexagonal), by installing specially sized bushings on the bar diameter. It is fitted with a special lubrication circuit that reduces friction between the self-adjusting bushings and the bar.

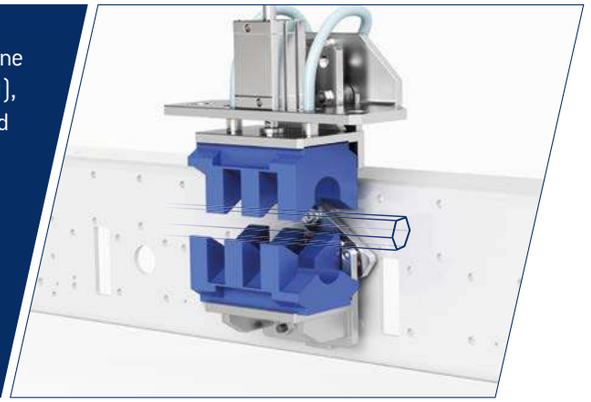

PRODUCTIVITY MAXIMIZATION

Get the best from your lathe by choosing IEMCA

The MAESTRO® bar feeder range sets no limits to your desire for efficiency. It allows to:

Reduce retooling time almost to zero

Minimize bar change time to 31 seconds*

Reach the maximum speed allowed by your lathe with every configuration

To change the diameter of the bar to machine, simply set the new diameter on the operator panel and the bar magazine will self-adjust automatically.

MAESTRO® has been conceived and designed in cooperation with CREE certified ergonomists to be at the service of the operator, in compliance with international physical and cognitive ergonomic standards. Ergonomics are now combined with a new modern design.

(*) Data referred to real situations.

A MAGAZINE FOR EVERY NEED

Single-rack, UP and Open Access Bundle

Single-rack Magazine
· Equipped with an auxiliary bar loading system
· Autonomy: 290 to 330 mm of useful surface

UP Magazine
· Can be loaded manually, with a IEMCA trolley, a forklift, a transpallet or a bridge crane
· Autonomy: 500 mm of useful surface (extendable up to 790 mm)

Open Access Bundle Magazine (OAB)
· Can be loaded with a IEMCA trolley, a forklift, a transpallet or a bridge crane
· Autonomy: 2,500 kg

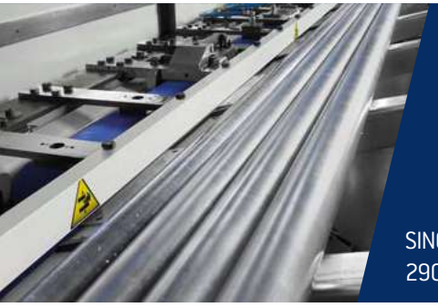

SINGLE-RACK MAGAZINE
290 to 330 mm of useful surface

UP MAGAZINE
500 mm of useful surface (extendable up to 790 mm)

OAB MAGAZINE
2,500 kg

CLOSER THAN EVER BEFORE!

Minimum installation distance

MAESTRO® is the bar feeder with the shortest installation distance. Thanks to the ABACOS system, it is possible to use short bar pushers thus reducing the installation distance between bar feeder and lathe.

AXIAL SHIFTING

Axial shifting* is the optimal response to operator needs.

FAST

The operator just needs to operate a lever to control the shifting with no need for tools.

ERGONOMIC

The operator starts the shifting while standing near the machine with no need to carry out other operations at floor height.

COMPACT

No obstacles on the floor.

*Optional on MAESTRO® 52.

CLEANLINESS AND SILENT OPERATION

That's what we want for your production areas!

MAESTRO® 80 has been designed to maximize working comfort in your production areas, creating the optimal environment for productivity.

· in 1983 IEMCA was the first to introduce lubrication in the guide channel. We have put our 35 years of experience in lubricant management into this project, with the aim of reducing leaks thanks to a new enlarged tank, a completely closed beam and a splash guard.

· The design of the machine is modern and attractive and was especially conceived by IEMCA to hide the cables inside avoiding to leave them visible on the ground.

· IEMCA has optimized acoustic comfort by reducing the machine noise throughout the work cycle: this has been achieved with careful design of the guards and studies on the guides material.

The cables are hidden inside the feeder to keep them out of sight and off the ground.

The new tool box* can be used by the operator to conveniently store IEMCA accessories.

A new larger tank, a completely closed beam and a splash guard reduce oil leakage

ACOUSTIC COMFORT
Thanks to the special attention put into the design of the guards and in-depth studies on the material from which the guides are made, IEMCA has reduced the noise emission levels of the machine during the work cycle.

*Optional on MAESTRO® 52.

INDUSTRY 4.0 OPERATOR INTERFACE

The future is now

The **7" operator interface** has special functions that make the machine extremely easy and intuitive to use. The operator can view in real time the operation of the ABACOS bushings throughout the work cycle. The "one touch" feature facilitates the operator: it is in fact possible to carry out multiple operations with just one touch. Work programs can be stored and easily recalled if needed. The bar feeder keypad can be re-installed on the lathe control panel.

In January 2017 IEMCA is the first company in the world producing bar feeders to deliver Industry 4.0 machines.
IEMCA devices are able to acquire and share data with other machines and production systems of the customer user, contributing to the constant improvement of production processes.

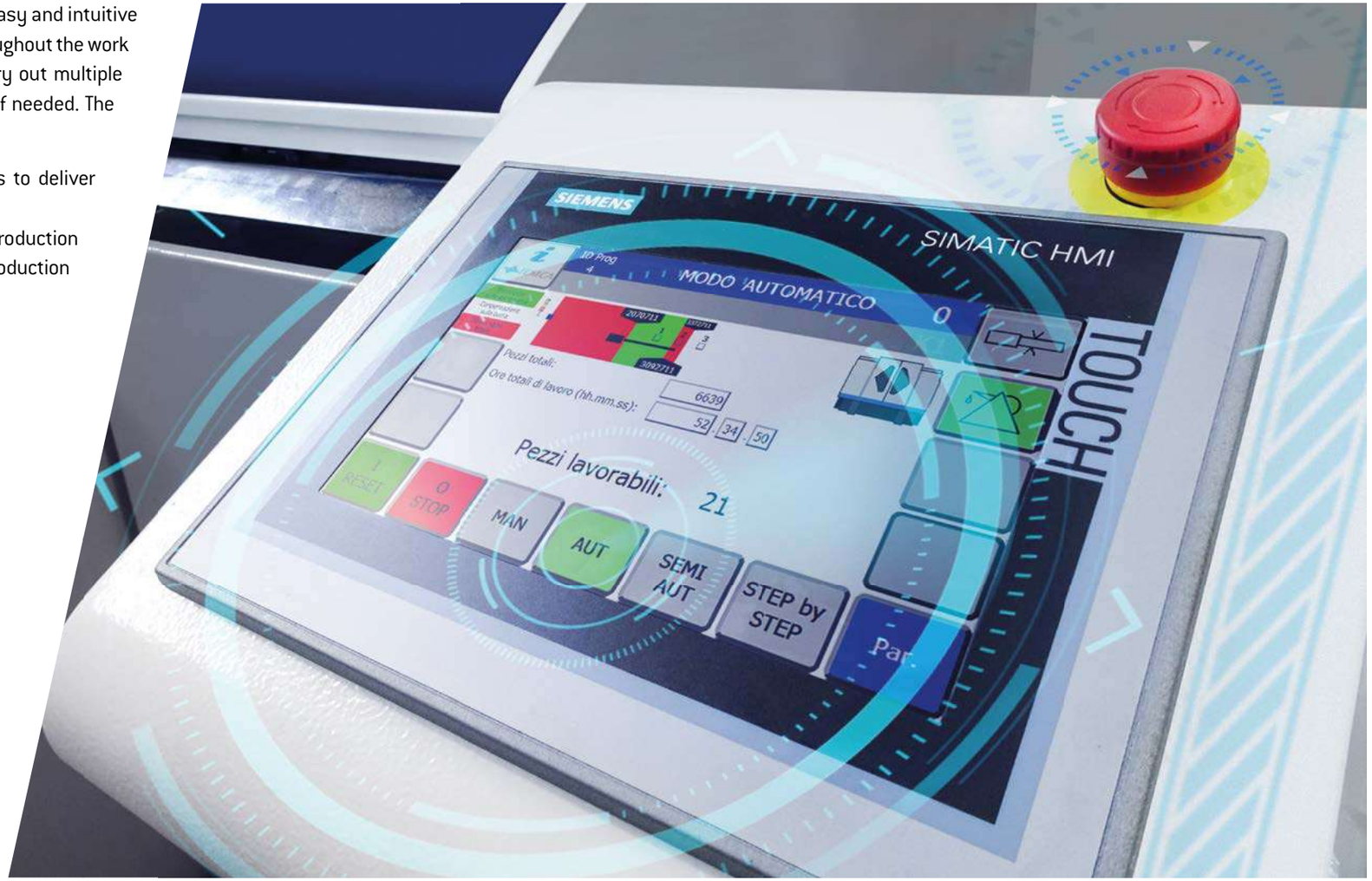

Send e-mails and texts in case of alarm on the machine

Telecontrol and remote control

Global teleassistance on all machine equipment

Backup and restore Machine Parameters

OPC UA clients

Telecontrol via OPC UA Clients

Telecontrol with camera

Remote control and Wi-Fi remote control

THE CUSTOMER FIRST

A worldwide network at your service

ITALY
IEMCA a BUCCI AUTOMATIONS S.p.A. Division
Via Granarolo 167
48018 Faenza (RA), ITALY
Ph. +39.0546.698000
F. +39.0546.46224
iemca.it@bucci-industries.com
www.iemca.com

KEY: Headquarters · Plant · Sales and Support Branch · Dealer · Agent · Support

BRASIL
BUCCI INDUSTRIES BRASIL
IGM DO BRASIL LTDA
Avenida dos Pinheiros 465
13283-008 Vinhedo - SP (São Paulo)
Ph. +55 19 3515 7220
iemca.br@bucci-industries.com

CHINA
BUCCI INDUSTRIES CHINA
BI-TECH (Suzhou) Co., Ltd.
No. 106 Wufang Road, Wujiang District
Suzhou City, Jiangsu Province, PRC
Ph. +86 512 8155 6988
F. +86 512 8155 6986
iemca.cn@bucci-industries.com

CZECH REPUBLIC
PODAJEX LTD
ING. PETR KALETA
Vendryně 1000
73994 Vendryně
TEL. +420 608 927 130
petr.kaleta@podajex.com
www.podajex.com

CZECH REPUBLIC
SFS PRO S.R.O.
Tečovská 911
763 02 Malenovice Zlín
TEL. Rostislav Sypták: +420 702 107 748
Milan Dosedla: +420 776 144 792
md@sfspro.cz
www.sfspro.cz

FRANCE
BUCCI INDUSTRIES FRANCE SARL
145, Rue Louis Armand
Z.I. Les Grands Prés 74300 Cluses
Ph. +33 450 896960
F. +33 450 896135
iemca.fr@bucci-industries.com

GERMANY
BUCCI INDUSTRIES
DEUTSCHLAND GmbH
Stammheimer Str. 10
D-70806 Kornwestheim
Ph. +49 (0)7154 83 70 700
F. +49 (0)7154 83 70 7025
iemca.de@bucci-industries.com

GERMANY
STIMPEL WERKZEUGMASCHINEN
Stuettinghauser Ringstr. 39
58515 Luedenscheid
TEL. +49 2351 78183
FAX +49 2351 78569
info@stimpel-werkzeugmaschinen.de
www.stimpel-werkzeugmaschinen.de

GERMANY
KRUG WERKZEUGMASCHINEN
Kirchberg 3
36448 Steinbach
TEL. +49 036961/72753
FAX +49 036961/33037
info@krug-werkzeugmaschinen.de
www.krug-werkzeugmaschinen.de

GERMANY
LOBERS REIMO
Rebgartenweg 5/1
D-79576 Weil am Rhein
TEL. +49 7621 161460
FAX +49 7621 16146 29
mail@lobers.de
www.lobers.de

GERMANY
HOSSFELD HERBERT GMBH
Koenigsberger Str 10
D-58511 Luedenscheid
TEL. +49 2351 80521
FAX +49 2351 860442
info@hossfeldservice.de

ITALY
BIANCHI MACCHINE
UTENSILI S.R.L.
Via XXIV Maggio
22070 Guanzate CO
TEL. +39 031 977377
FAX +39 031 977083
info@bianchi-iemca.it
www.bianchi-iemca.it

INDIA
VAIBHAV NAGORI
NATIONAL SALES MANAGER
Hauz Khas Enclave
110016 New Delhi
TEL. +91 9986337038
v.nagori@bucci-industries.com

JAPAN
BUCCI INDUSTRIES JAPAN
IGM Nippon K.K.
6-10-1 Kamoi, Midori-Ku
226-0003 Yokohama, Japan
Ph. +81 45 931 5096
F. +81 45 931 5098
iemca.jp@bucci-industries.com

POLAND
PODAJEX LTD
ING. PETR KALETA
Lukowa 15/3
43-300 Bielko-Biała
TEL. +420 608 927 130
petr.kaleta@podajex.com
www.podajex.com

POLAND
CENTRUM TECHNIKI
MACRO SP. Z O.O.
ul. Klonowa 24 - 62-002
Suchy Las
TEL. +48 61 656 35 55
FAX +48 61 842 06 02
biuro.sm@macro.net.pl
www.macro.net.pl

ROMANIA
PODAJEX LTD
ING. PETR KALETA
Str. Cri an 14
415 100 Ale d
TEL. +420 608 927 130
petr.kaleta@podajex.com
www.podajex.com

SOUTH KOREA
U-HAN TRADING CO. LTD.
.RM #311, 8-DONG, 197,
Gurojungang-ro, Guro-gu
<08216> - Seoul
TEL. +82 2 6345 2500
FAX +82 2 782 2454
uhan@uhantrading.com
www.uhantrading.com

SPAIN
MANTEIN
Poligono Olaso, C/ Olasope Nº3 Nave 5
20870 Elgoibar Guipúzcoa
TEL. +34 943 25 79 73
FAX +34 943 25 79 74
mantein@mantein.com
www.mantein.com

SWEDEN
BUCCI INDUSTRIES NORDIC AB
Kungegårdsgatan 7
441 57 Alingsås
Sweden
Ph. +46 322 66 87 20
F. +46 322 63 33 67
iemca.se@bucci-industries.com

SWITZERLAND
BUCCI INDUSTRIES SWISS SA
BELPRAHON
Route du Grandval 3
CH-2744 Belprahon
TEL. +41 32 493 40 54
FAX +41 32 493 40 55
iemca.ch@bucci-industries.com

TAIWAN
BUCCI INDUSTRIES TAIWAN GIMCO Ltd.
No. 297, Dongsing Rd., Dali Dist.,
41257 Taichung City, Taiwan, R.O.C.
Ph. +886-4-2406-6970
F. +886-4-2406-6943
iemca.tw@bucci-industries.com

TURKEY
SINTEK MÜHENDISLIK
Tarabya Mah. Yumak Sok No:
3A/1 Sarıyer Istanbul
TEL. +90 (0212) 299 61 84 85
FAX +90 (0212) 299 56 75
sinan.onurlu@sintekmuhendislik.com
www.sintekmuhendislik.com

UNITED KINDOM
1ST MACHINE TOOLS
ACCESSORIES LIMITED
1 The Headlands
SP5 3JJ Downton Salisbury
TEL. +44 1725 512517
FAX +44 1725 512 529
enquiries@1mta.com
www.1mta.com

USA
BUCCI INDUSTRIES USA Inc.
9332 Forsyth Park Drive
NC 28273, Charlotte, USA
Ph. 001-704-5838341
F. 001-704-5838486
iemca.us@bucci-industries.com

IEMCA SUPPORT WILL HELP KEEP YOUR MACHINE OPERATING AT 100%

WORLDWIDE SUPPORT

IEMCA customers can count on the support of more than 150 technicians for prompt intervention on site, phone support and spare parts.

Preventive maintenance: IEMCA technical experts support the end user keeping the bar feeder in healthy operating condition for years.

Recommended spare parts: the end user can contact the IEMCA network and get convenient and original spare parts packages.

TECHNICAL SPECIFICATIONS*

	MAESTRO® 52	MAESTRO® 80	MAESTRO® 100
ROUND BARS	10 - 49 mm	10 - 80 mm	10 - 100 mm
HEXAGONAL BARS	9 - 42 mm	10 - 69 mm	10 - 86 mm
SQUARE BARS	8 - 34 mm	10 - 56 mm	10 - 70 mm
MP MAGAZINE	297 ÷ 319 mm	290 ÷ 330 mm	290 ÷ 330 mm
UP MAGAZINE	500 mm of useful surface (extendable up to 790 mm)	500 mm of useful surface (extendable up to 790 mm)	500 mm of useful surface (extendable up to 790 mm)
OAB MAGAZINE	2500 kg	2500 kg	2500 kg
NUMBER OF SPINDLES	1	1	1
BAR LENGTH	Ver. 32 - 3200 mm Ver. 37 - 3700 mm Ver. 42 - 4200 mm	Ver. 32 - 3200 mm Ver. 37 - 3700 mm Ver. 42 - 4200 mm	Ver. 32 - 3200 mm Ver. 37 - 3700 mm Ver. 42 - 4200 mm
MAX BAR WEIGHT	100 kg	180 kg	180 kg
BAR CHANGEOVER TIME	Ver. 32 - 31 s Ver. 37 - 33 s Ver. 42 - 35 s	Ver. 32 - 31 s Ver. 37 - 33 s Ver. 42 - 35 s	Ver. 32 - 31 s Ver. 37 - 33 s Ver. 42 - 35 s

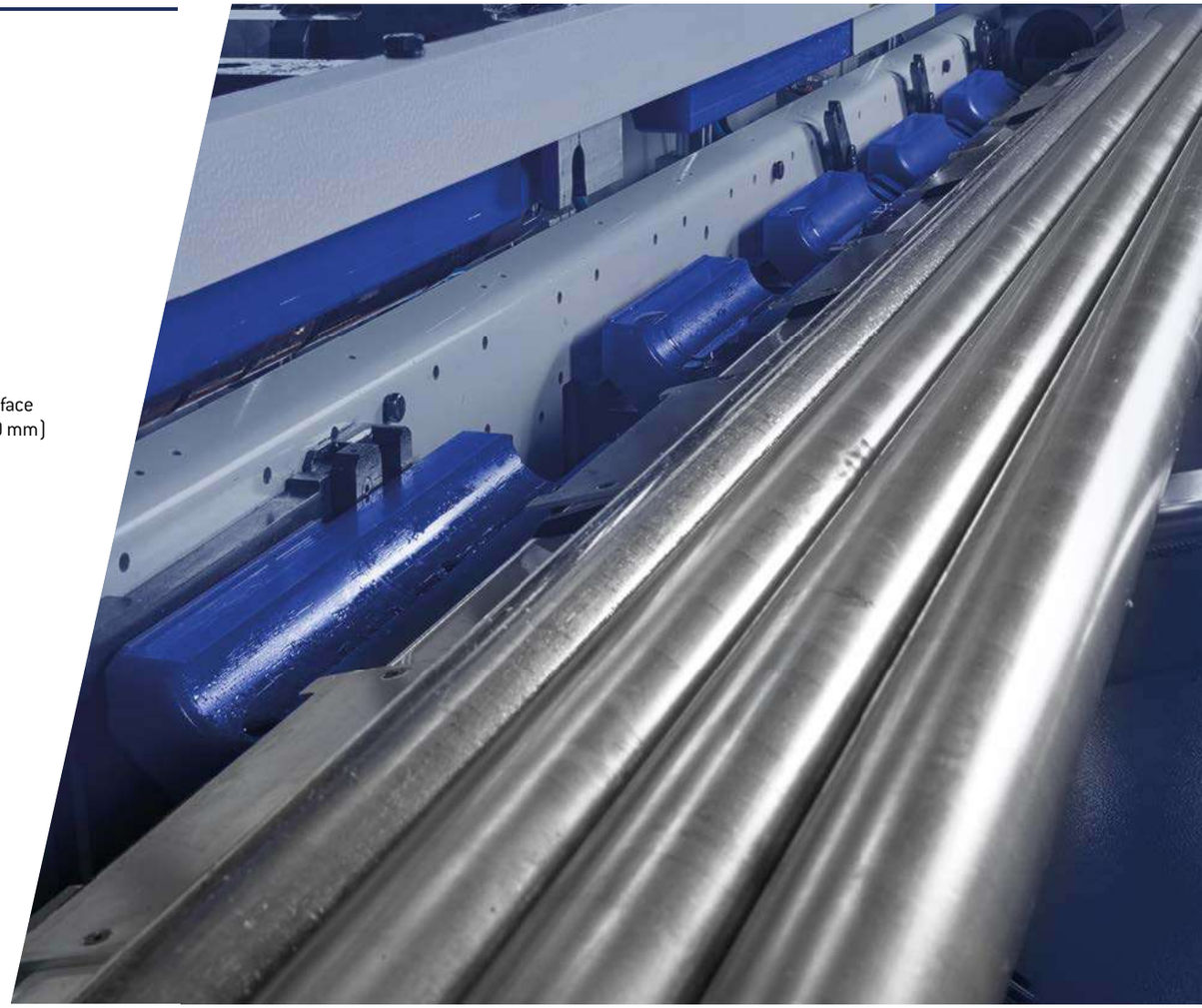

*See the technical specifications table in the following pages for the specific values for each bar feeder model and magazine type.

MAESTRO® 52

Technical specifications	Single-rack magazine (MP)
Round bar dimensions	10 - 49 mm
Hexagonal bars dimensions (key socket)	9 - 42 mm
Square bars side	8 - 34 mm
Minimum bar length	1000 mm
Maximum bar length	Ver. 32 - 3200 mm · Ver. 37 - 3700 mm · Ver. 42 - 4200 mm
MP magazine capacity	297 - 319 mm (e.g. 29 bars measuring Ø10 mm, 6 bars measuring Ø49 mm)
Axial shifting	700 mm (optional)
Max bar weight	100 kg
Max remnant length	400 mm
Min remnant length	110 mm
Bar changeover time*	Ver. 32 - 31 s · Ver. 37 - 33 s · Ver. 42 - 35 s
Operating voltage	230 / 400 Volt
Operating voltage	50 / 60 Hz
Control voltage	24 Volt A.C. - 24 Volt D.C.
Installed power	1,5 kW
Oil quantity	110 L
Air pressure	Min. 6 bar
Air consumption	35 Nl/bar change
Bar feeder weight	Ver. 32 - 1400 kg · Ver. 37 - 1470 kg · Ver. 42 - 1550 kg

*The table contains purely indicative data.
Different factors such as length and material of the barstock, and some of the parameter settings by the operator, can affect the time significantly.

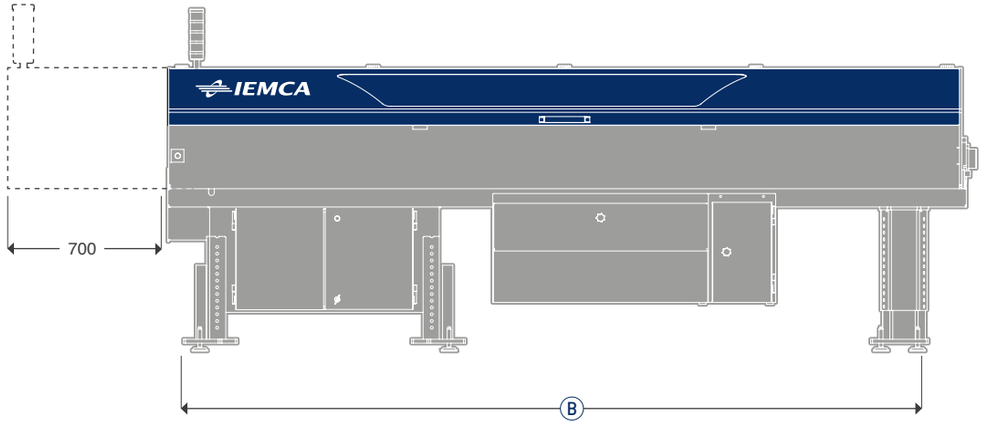

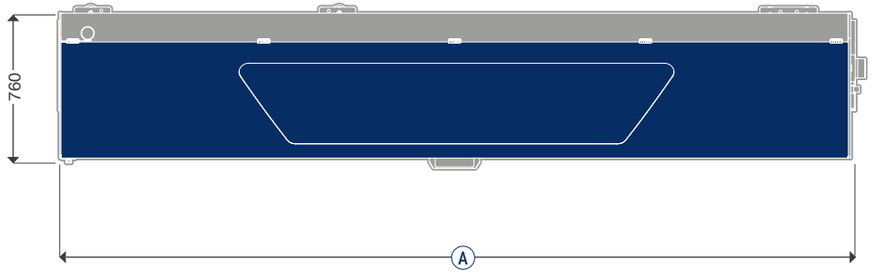

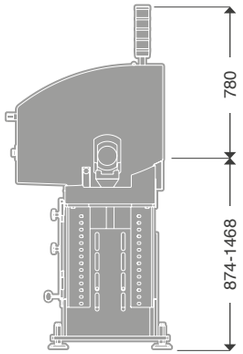

MAESTRO® 52 - Single-rack magazine (MP)

	32	37	42
A	4125	4625	5125
B	3880	4380	4880

MAESTRO® 52

Technical specifications	UP Magazine
Round bar dimensions	10 - 49 mm
Hexagonal bars dimensions (key socket)	9 - 42 mm
Square bars side	8 - 34 mm
Minimum bar length	Ver. 32 - 2000 mm · Ver. 37 - 2500 mm · Ver. 42 - 3000 mm
Maximum bar length	Ver. 32 - 3200 mm · Ver. 37 - 3700 mm · Ver. 42 - 4200 mm
UP magazine capacity	500 mm of useful surface (extendable up to 790 mm)
Axial shifting	700 mm (optional)
Max bar weight	100 kg
Max remnant length	400 mm
Min remnant length	110 mm
Bar changeover time*	Ver. 32 - 31 s · Ver. 37 - 33 s · Ver. 42 - 35 s
Operating voltage	230 / 400 Volt
Operating voltage	50 / 60 Hz
Control voltage	24 Volt A.C. - 24 Volt D.C.
Installed power	2 kW
Oil quantity	110 L
Air pressure	Min. 6 bar
Air consumption	35 Nl/bar change
Bar feeder weight	Ver. 32 - 1800 kg · Ver. 37 - 1885 kg · Ver. 42 - 1980 kg

*The table contains purely indicative data.
Different factors such as length and material of the barstock, and some of the parameter settings by the operator, can affect the time significantly.
Check availability with your IEMCA sales representative.

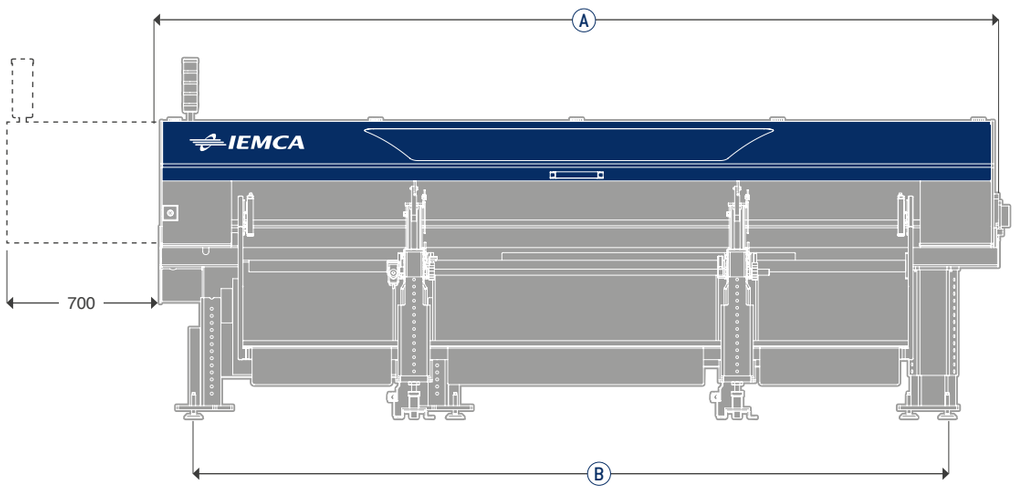

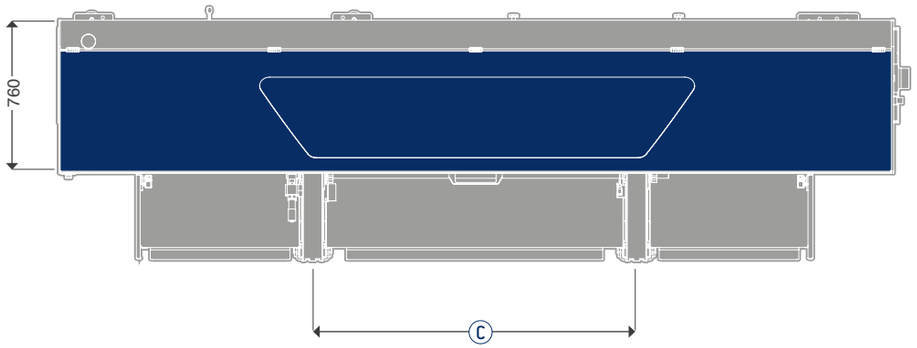

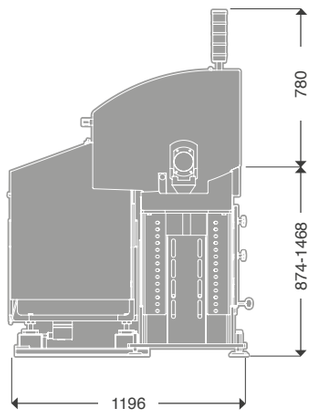

MAESTRO® 52 - UP Magazine

	32	37	42
A	4125	4625	5125
B	3880	4380	4880
C	1500	2000	2500

MAESTRO® 52

Technical specifications	OAB Magazine
Round bar dimensions	15 - 49 mm
Hexagonal bars dimensions (key socket)	15 - 42 mm
Square bars side	15 - 34 mm
Minimum bar length	Ver. 32 - 2000 mm · Ver. 37 - 2500 mm · Ver. 42 - 3000 mm
Maximum bar length	Ver. 32 - 3200 mm · Ver. 37 - 3700 mm · Ver. 42 - 4200 mm
OAB magazine capacity	2.500 kg
Axial shifting	700 mm (optional)
Max bar weight	100 kg
Max remnant length	400 mm
Min remnant length	110 mm
Bar changeover time*	Ver. 32 - 31 s · Ver. 37 - 33 s · Ver. 42 - 35 s
Operating voltage	230 / 400 Volt
Operating voltage	50 / 60 Hz
Control voltage	24 Volt A.C. - 24 Volt D.C.
Installed power	3 kW
Oil quantity	110 L
Air pressure	Min. 6 bar
Air consumption	47 Nl/bar change
Bar feeder weight	Ver. 32 - 1960 kg · Ver. 37 - 2065 kg · Ver. 42 - 2180 kg

*The table contains purely indicative data.
Different factors such as length and material of the barstock, and some of the parameter settings by the operator, can affect the time significantly.
Check availability with your IEMCA sales representative.

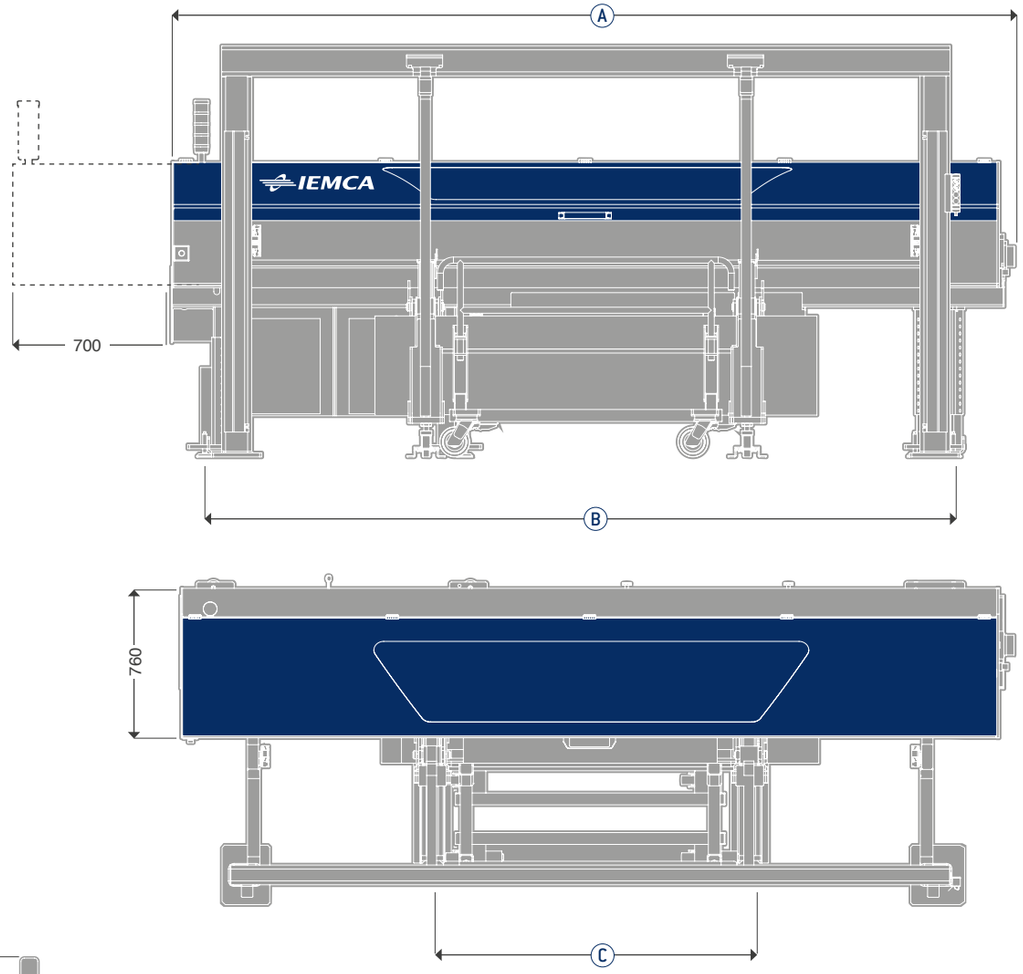

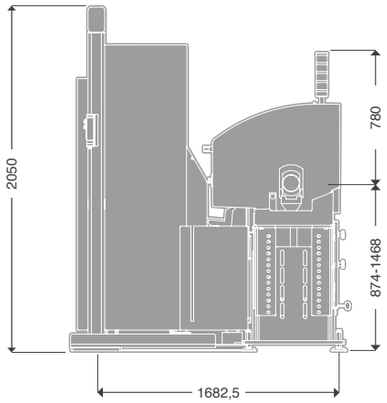

MAESTRO® 52 - OAB Magazine

	32	37	42
A	4125	4625	5125
B	3880	4380	4880
C	1600	1900	1600-2600

MAESTRO® 80 · 100

Technical specifications	MAESTRO® 80 MP	MAESTRO® 100 MP
Round bar dimensions	10* - 80 mm	10* - 100 mm
Hexagonal bars dimensions (key socket)	10* - 69 mm	10* - 86 mm
Square bars side	10* - 56 mm	10* - 70 mm
Minimum bar length	1100 mm	
Maximum bar length	Ver. 32 - 3200 mm · Ver. 37 - 3700 mm · Ver. 42 - 4200 mm	
MP magazine capacity	290 - 330 mm (e.g. 29 bars measuring Ø10 mm, 4 bars measuring Ø80 mm)	290 - 330 mm (e.g. 29 bars measuring Ø10 mm, 3 bars measuring Ø100 mm)
Axial shifting	800 mm	
Max bar weight	180 kg	
Max remnant length	Ø10 ÷ 65 mm = 400 mm Ø66 ÷ 80 mm = 250 mm	Ø10 ÷ 65 mm = 400 mm Ø66 ÷ 100 mm = 250 mm
Min remnant length	110 mm	
Bar changeover time*	Ver. 32 - 31 s · Ver. 37 - 33 s · Ver. 42 - 35 s	
Operating voltage	230 / 400 Volt	
Operating voltage	50 / 60 Hz	
Control voltage	24 Volt A.C. - 24 Volt D.C.	
Installed power	1,5 kW	
Oil quantity	115 L	
Air pressure	Min. 6 bar	
Air consumption	67 Nl/bar change	
Bar feeder weight	Ver. 32 - 1880 kg · Ver. 37 - 1950 kg · Ver. 42 - 2050 kg	

*Please contact IEMCA to correctly define the minimum diameter of workable bar.
**The table contains purely indicative data.
Different factors such as length and material of the barstock, and some of the parameter settings by the operator, can affect the time significantly.

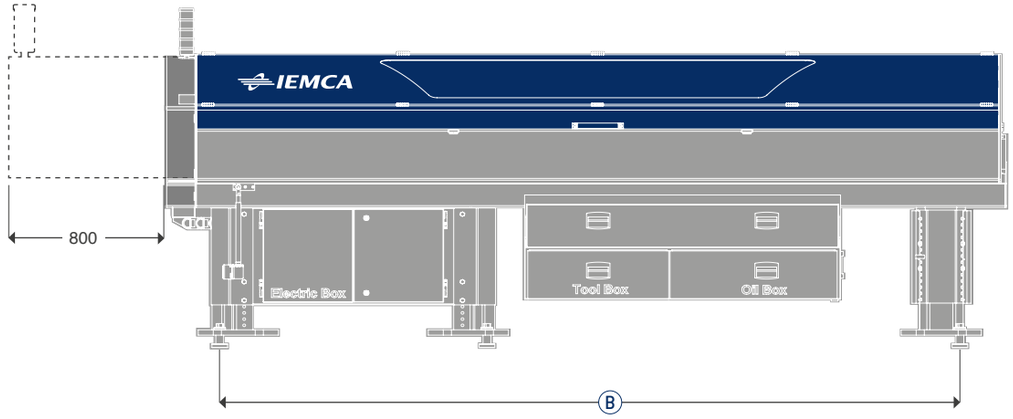

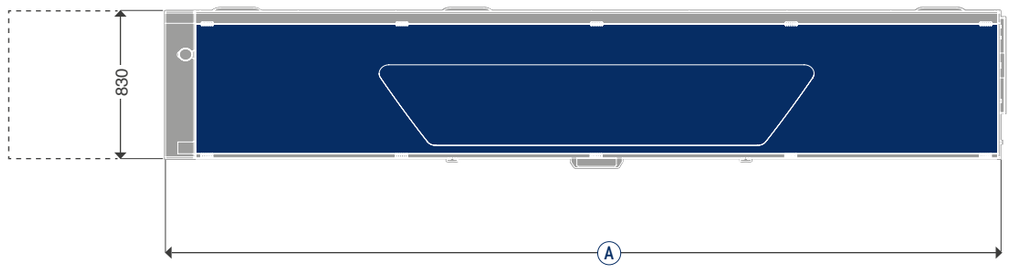

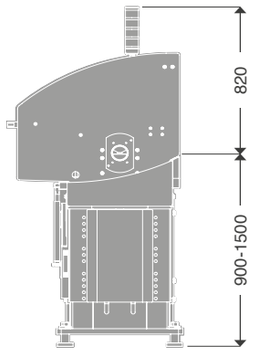

MAESTRO® 80 · 100 - Single-rack Magazine

	32	37	42
A	4292	4792	5292
B	3783,5	4283,5	4783,5

MAESTRO® 80 · 100

Technical specifications	MAESTRO® 80 UP	MAESTRO® 100 UP
Round bar dimensions	10* - 80 mm	10* - 100 mm
Hexagonal bars dimensions (key socket)	10* - 69 mm	10* - 86 mm
Square bars side	10* - 56 mm	10* - 70 mm
Minimum bar length	Ver. 32 - 2000 mm · Ver. 37 - 2500 mm · Ver. 42 - 3000 mm	
Maximum bar length	Ver. 32 - 3200 mm · Ver. 37 - 3700 mm · Ver. 42 - 4200 mm	
UP magazine capacity	500 mm of useful surface (extendable up to 790 mm)	
Axial shifting	800 mm	
Max bar weight	180 kg	
Max remnant length	Ø10 ÷ 65 mm = 400 mm Ø66 ÷ 80 mm = 250 mm	Ø10 ÷ 65 mm = 400 mm Ø66 ÷ 100 mm = 250 mm
Min remnant length	110 mm	
Bar changeover time*	Ver. 32 - 31 s · Ver. 37 - 33 s · Ver. 42 - 35 s	
Operating voltage	230 / 400 Volt	
Operating voltage	50 / 60 Hz	
Control voltage	24 Volt A.C. - 24 Volt D.C.	
Installed power	2 kW	
Oil quantity	115 L	
Air pressure	Min. 6 bar	
Air consumption	65 Nl/bar change	
Bar feeder weight	Ver. 32 - 2280 kg · Ver. 37 - 2365 kg · Ver. 42 - 2480 kg	

*Please contact IEMCA to correctly define the minimum diameter of workable bar.
**The table contains purely indicative data.
Different factors such as length and material of the barstock, and some of the parameter settings by the operator, can affect the time significantly.

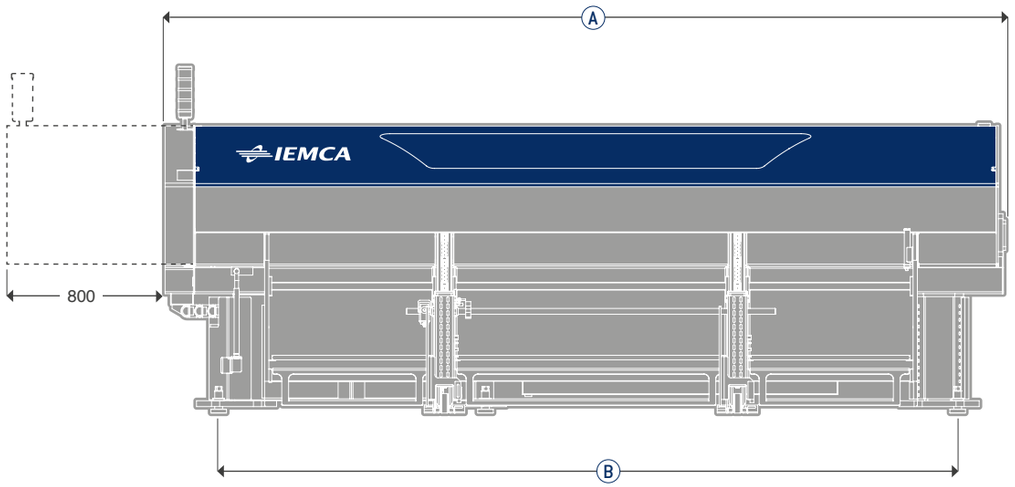

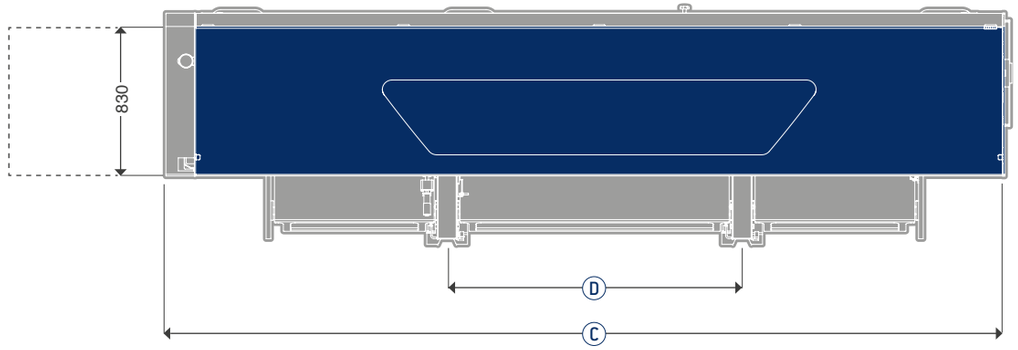

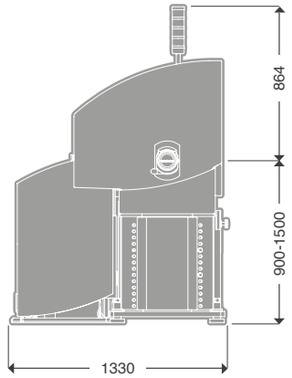

MAESTRO® 80 · 100 - UP Magazine

	32	37	42
A	4292	4792	5292
B	3783,5	4283,5	4783,5
C	4121	4621	5121
D	1500	2000	2500

MAESTRO® 80 · 100

Technical specifications	MAESTRO® 80 OAB	MAESTRO® 100 OAB
Round bar dimensions	15* - 80 mm	15* - 100 mm
Hexagonal bars dimensions (key socket)	15* - 69 mm	15* - 86 mm
Square bars side	15* - 56 mm	15* - 70 mm
Minimum bar length	Ver. 32 - 2000 mm · Ver. 37 - 2500 mm · Ver. 42 - 3000 mm	
Maximum bar length	Ver. 32 - 3200 mm · Ver. 37 - 3700 mm · Ver. 42 - 4200 mm	
OAB magazine capacity	2500 kg	
Axial shifting	800 mm	
Max bar weight	180 kg	
Max remnant length	Ø15 ÷ 65 mm = 400 mm Ø66 ÷ 80 mm = 250 mm	Ø15 ÷ 65 mm = 400 mm Ø66 ÷ 100 mm = 250 mm
Min remnant length	110 mm	
Bar changeover time*	Ver. 32 - 31 s · Ver. 37 - 33 s · Ver. 42 - 35 s	
Operating voltage	230 / 400 Volt	
Operating voltage	50 / 60 Hz	
Control voltage	24 Volt A.C. - 24 Volt D.C.	
Installed power	3 kW	
Oil quantity	115 L	
Air pressure	Min. 6 bar	
Air consumption	65 Nl/bar change	
Bar feeder weight	Ver. 32 - 2440 kg · Ver. 37 - 2545 kg · Ver. 42 - 2680 kg	

*Please contact IEMCA to correctly define the minimum diameter of workable bar.
**The table contains purely indicative data.
Different factors such as length and material of the barstock, and some of the parameter settings by the operator, can affect the time significantly.

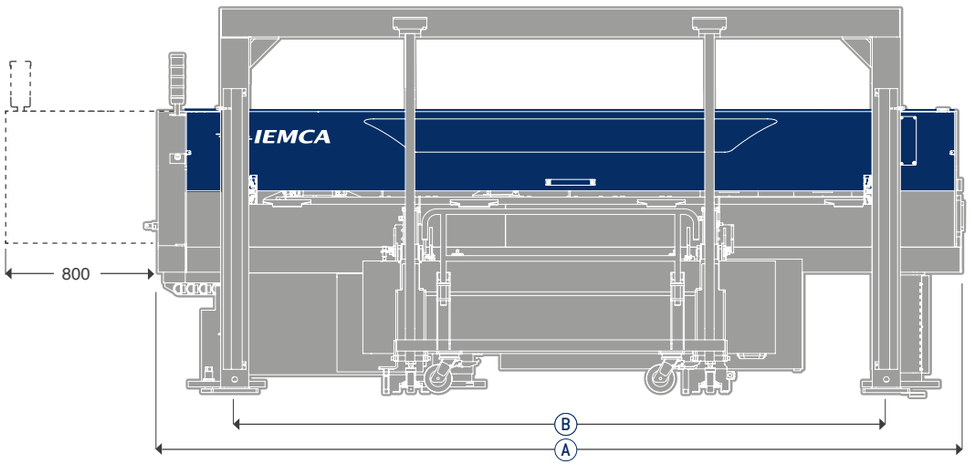

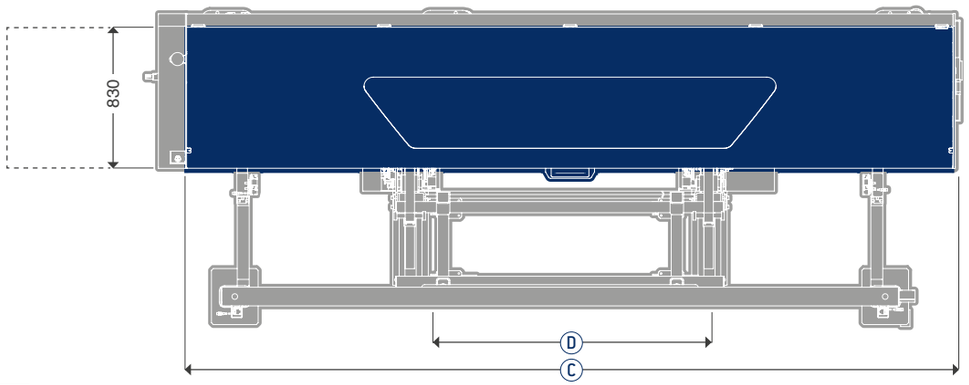

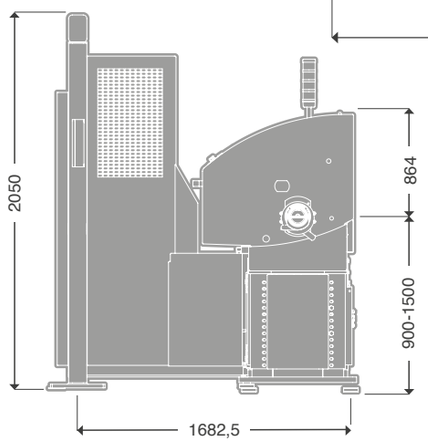

MAESTRO® 80 · 100 - OAB Magazine

	32	37	42
A	4292	4792	5292
B	3783,5	4283,5	4783,5
C	4121	4621	5121
D	1600	1900	1600-2600

REFERENCES

MAESTRO 80 MP with BIGLIA B465 T3 Y3

MAESTRO 80 UP with DMG Mori CLX 450 TC

MAESTRO 80 MP with DMG MORI CTX 2500 / 700

REFERENCES

MAESTRO 80 MP with NAKAMURA-TOME SUPER NJT

MAESTRO 52 with NAKAMURA-TOME WY-100II

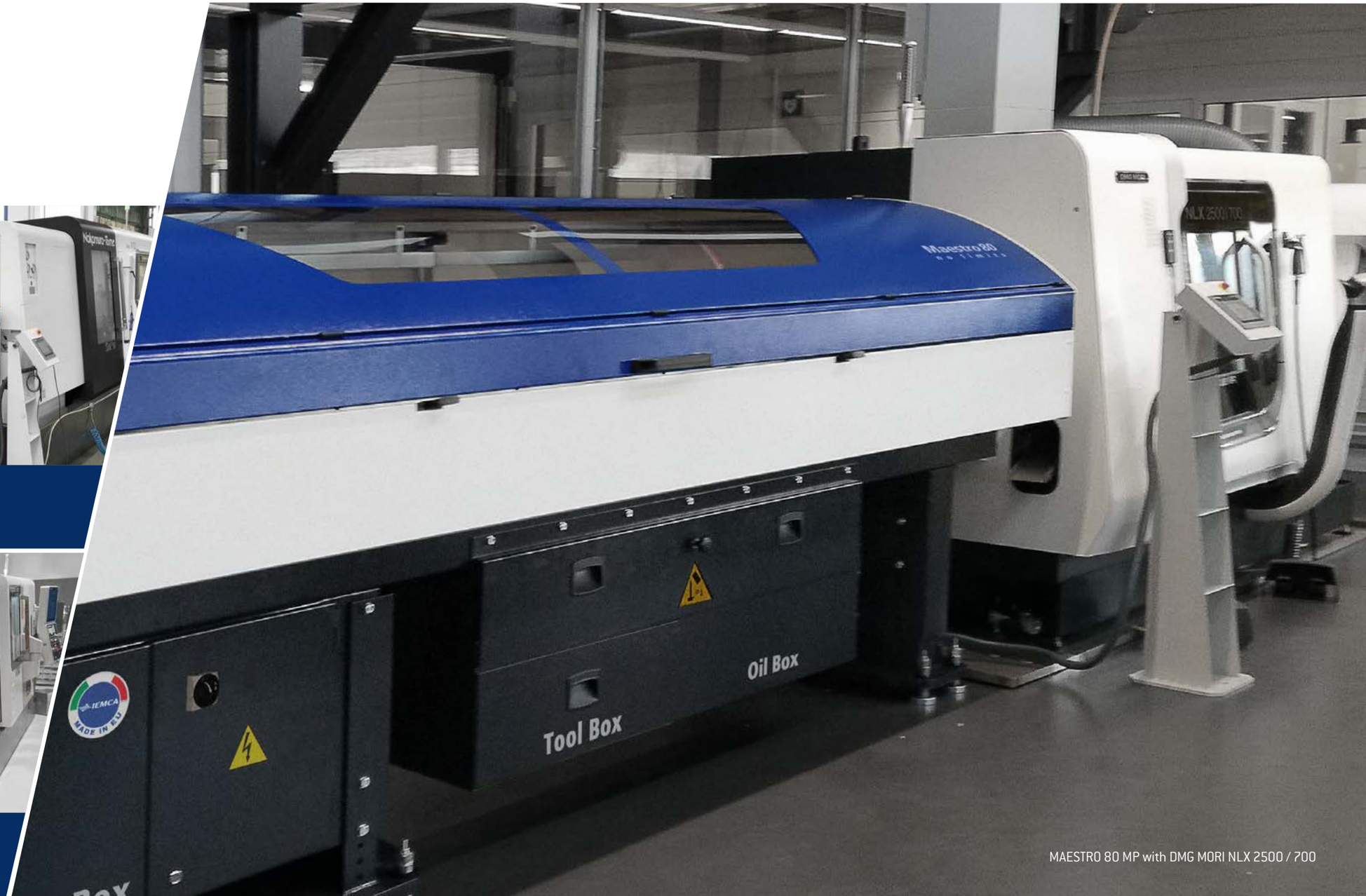

MAESTRO 80 MP with DMG MORI NLX 2500 / 700

REFERENCES

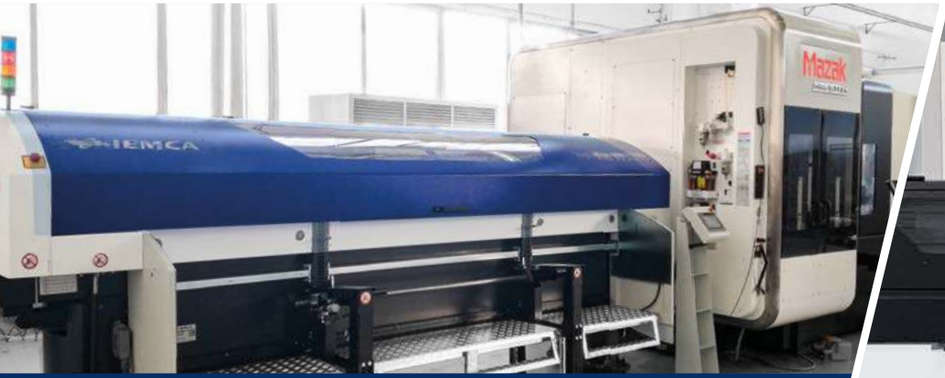

MAESTRO 100 UP with MAZAK INTEGREX i-400S

MAESTRO 80 MP with DOOSAN PUMA TT 1800

MAESTRO 80 MP with MAZAK QT-COMPACT 200MS L

BUCCI INDUSTRIES

People, Passion, Technology!

The BUCCI INDUSTRIES GROUP is worldwide leader in two sectors: in industrial AUTOMATION & ROBOTICS and advanced COMPOSITE MATERIALS.
In the automation industry, Bucci Industries operates with the following brands:
IEMCA: worldwide leader in the design and production of bar feeders (www.iemca.com)
GIULIANI: leader in the industry of high-productivity and high-flexibility machine tools and transfer machines (www.giulianimachines.com)
SINTECO: leader in the field of automation and robotics for assembly applications and in the management of medicine unit doses in hospitals (www.sintecorobotics.com)
VIRE: benchmark for the packaging of hygiene products (www.vire.it)

Bucci Industries operates with the brand BUCCI COMPOSITES in the design and production of advanced composite materials, primarily carbon fibre (www.bucci-composites.com)

www.bucci-industries.com

WORLDWIDE LEADER

950 PEOPLE

150 R&D ENGINEERS

PARTNERSHIPS WITH UNIVERSITIES AND RESEARCH CENTRES

+70 YEARS OF HISTORY

INVESTMENTS TO CREATE NEW SKILLS

1945 Founding of **CISA**

1961 Founding of **IEMCA**

1984 Acquisition of **GIULIANI**

1985 Inauguration of Bucci Industries **USA**

1987 Inauguration of Bucci Industries **Deutschland**

1996 Opening of IEMCA Gimco plant in **Taiwan**

1996 Inauguration of Bucci Industries **France**

1999 Opening of IEMCA branch in **Giappone**

1999 Selling of CISA - Founding of **BUCCI INDUSTRIES**

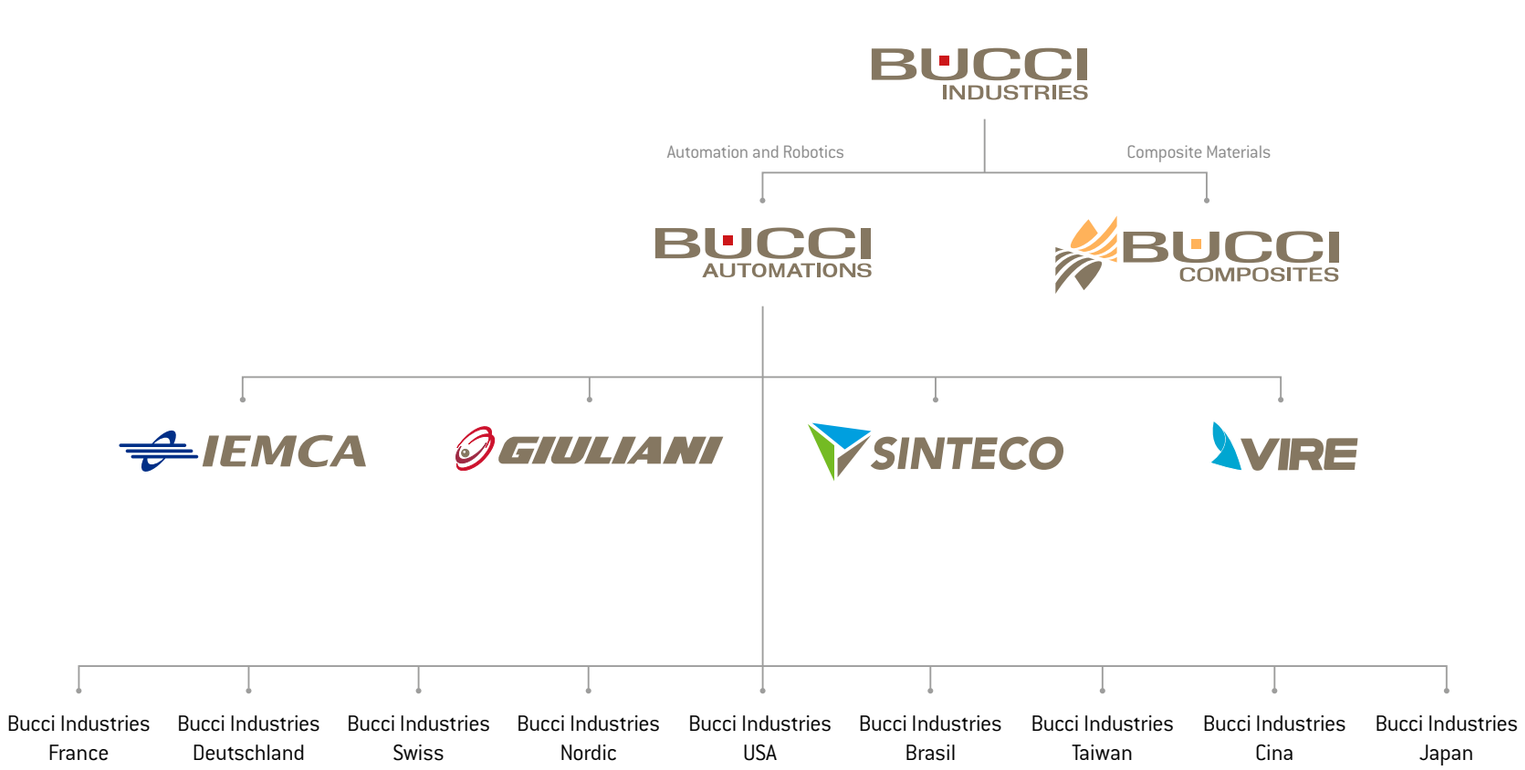

Italian holding

Italian companies

Italian companies' divisions

Worldwide subsidiary companies

2000
Acquisition of **RIBA Composites** renamed **BUCCI COMPOSITES** in 2020

2002
Inauguration of Bucci Industries **Brasil**

2003
Acquisition of **SINTECO**

2005
Opening of IEMCA Bi-Tech plant in **Cina**

2007
Acquisition of **VIRE**

2015
Creation of **BUCCI AUTOMATIONS**

2017
Founding of Bucci Industries **Swiss**

2019
Founding of Bucci Industries **Nordic**

2022
Founding of Bucci Industries **Korea**

IEMCA WORLDWIDE

HEADQUARTERS

IEMCA
a BUCCI AUTOMATIONS S.p.A. Division
Via Granarolo 167
48018 Faenza (RA), Italy
Ph. +39.0546.698000
F. +39.0546.46224
iemca.it@bucci-industries.com
www.iemca.com

BRANCHES

BUCCI INDUSTRIES BRASIL LTDA
Avenida dos Pinheiros 465
13283-008 Vinhedo - SP,
Brasil
Ph. +55 19 3515 7220
iemca.br@bucci-industries.com

BUCCI INDUSTRIES CHINA
BI-TECH (Suzhou) Co., Ltd.
No. 106 Wufang Road, Wujiang District,
Suzhou City, Jiangsu Province, PRC
Ph. +86 512 8155 6988
F. +86 512 8155 6986
iemca.cn@bucci-industries.com

BUCCI INDUSTRIES DEUTSCHLAND GmbH
Stammheimer Str. 10
D-70806 Kornwestheim, Deutschland
Ph. +49 (0)7154 83 70 700
F. +49 (0)7154 83 70 7025
iemca.de@bucci-industries.com

BUCCI INDUSTRIES FRANCE Sarl
145 Rue Louis Armand
Z.I. Les Grands Prés
74300 Cluses, France
Ph. +33 450 896960
F. +33 450 896135
iemca.fr@bucci-industries.com

BUCCI INDUSTRIES JAPAN
IGM Nippon K.K.
6-10-1 Kamoi, Midori-KU
226-0003 Yokohama, Japan
Ph. +81 45 931 5096
F. +81 45 931 5098
iemca.jp@bucci-industries.com

BUCCI INDUSTRIES NORDIC AB
Metallgatan 2-4
441 32 Alingsås
Sweden
Ph. +46 322 66 87 20
F. +46 322 63 33 67
iemca.se@bucci-industries.com

BUCCI INDUSTRIES KOREA LIMITED
#131~132, 337, Bupyeong-daero,
Bupyeong-gu, Incheon, Republic of Korea
Ph. +82 32-293-8341
iemca.kr@bucci-industries.com

BUCCI INDUSTRIES SWISS SA
Route du Grandval 3
CH-2744 Belprahon, Switzerland
Ph. +41 32 493 40 54
F. +41 32 493 40 55
iemca.ch@bucci-industries.com

BUCCI INDUSTRIES TAIWAN
GIMCO Ltd.
NO. 297, Dongsing Rd., Dali Dist.,
41257 Taichung City, Taiwan, R.O.C.
Ph. +886-4-2406-6970
F. +886-4-2406-6943
iemca.tw@bucci-industries.com

BUCCI INDUSTRIES USA Inc.
9332 Forsyth Park Drive
NC 28273, Charlotte, USA
Ph. 001-704-5838341
F. 001-704-5838486
iemca.us@bucci-industries.com

FOLLOW US ON

COMPANY AUTHORISED TO USE THE MARK
UCIMU

IEMCA prefers

ALGRA AVIA Member IMC Group

IEMCA is a brand of BUCCI INDUSTRIES

www.iemca.com

Specifications are subject to change without notice. The information in this catalogue is correct at the time of publishing. Catalogue code. **5001921 . EN** 05/22

art: cabrioletstudio